MA019-000-00-00
Doc. ver.: 5.20

C166/ST10 v8.9

Cross-Assembler, Linker/Locator, Utilities User's Manual

TASKING
Embedded software development from Altium.

A publication of

Altium BV

Documentation Department

Copyright © 1991-2011 Altium BV

All rights reserved. Reproduction in whole or part is prohibited
without the written consent of the copyright owner.

TASKING is a brand name of Altium Limited.

The following trademarks are acknowledged:

FLEXlm is a registered trademark of Macrovision Corporation
Intel is a trademark of Intel Corporation.
Motorola is a registered trademark of Motorola, Inc.
MS-DOS and Windows are registered trademarks of Microsoft Corporation.
SUN is a trademark of Sun Microsystems, Inc.
UNIX is a registered trademark of X/Open Company, Ltd.

All other trademarks are property of their respective owners.

Data subject to alteration without notice.

http://www.tasking.com
http://www.altium.com

The information in this document has been carefully reviewed and is believed to be accurate and reliable. However, Altium assumes no liabilities for inaccuracies in this document. Furthermore, the delivery of this information does not convey to the recipient any license to use or copy the software or documentation, except as provided in an executed license agreement covering the software and documentation.

Altium reserves the right to change specifications embodied in this document without prior notice.

CONTENTS

TABLE OF CONTENTS

TASKING

CONTENTS

SOFTWARE CONCEPT 1-1

1.1	The Modular Concept	1-3
1.1.1	Modular Programming	1-3
1.1.2	Modular Programming with C166/ST10 Toolchain	1-4
1.1.3	Module Structure	1-6
1.1.4	Connections Between Modules	1-7
1.2	Procedures	1-7
1.2.1	Defining a Procedure	1-8
1.2.2	Procedure Interfaces	1-8
1.2.3	Procedure Types	1-9
1.3	Interrupt Concepts	1-10
1.4	The Task Concept	1-11
1.4.1	Hardware Support of Tasks	1-11
1.4.2	Software Support of Tasks	1-12
1.4.3	Structure of a Task	1-13
1.4.3.1	Software Definition of a Task	1-13
1.4.3.2	Attributes of a Task	1-14
1.4.4	Connections Between Tasks	1-15
1.4.4.1	EXTERN-GLOBAL Connection	1-16
1.4.4.2	COMMON Sections	1-18
1.4.4.3	COMMON Registers	1-19
1.4.4.4	Same Module in Several Tasks	1-19
1.5	The Flat Interrupt Concept	1-20
1.6	Logical Memory Segmentation (Section, Group, and Class)	1-23
1.6.1	The Term 'Section'	1-23
1.6.1.1	Attributes of a Section	1-24
1.6.1.2	Generating Addresses in a Section	1-24
1.6.2	The Term 'Group'	1-25
1.6.3	The Term 'Class'	1-26
1.7	Memory Models	1-27
1.7.1	CPU Memory Mode	1-27
1.7.2	Assembler Memory Models	1-27
1.7.3	NONSEGMENTED Memory Model	1-28

1.7.4	NONSEGMENTED/SMALL Memory Model	1-29
1.7.5	SEGMENTED Memory Model	1-32
1.8	Registers	1-34
1.8.1	Location of Registers	1-34
1.8.2	Accessing Registers	1-34
1.8.3	Register Banks	1-36
1.8.3.1	Defining Register Banks	1-36
1.9	Use of the PEC (Peripheral Event Controller)	1-38
1.9.1	Addressing as MEM Type	1-38
1.9.2	Addressing as GPRs	1-38
1.10	Defining and Addressing Memory Units	1-39
1.10.1	Basic Data Units	1-39
1.10.1.1	Defining Basic Data Units	1-39
1.10.1.2	Addressing Basic Data Units	1-39
1.10.2	Variables and Labels	1-40
1.10.2.1	Defining Code Labels	1-41
1.10.2.2	Defining Data Labels	1-43
1.10.3	Constants	1-44
1.10.4	Pointers	1-44
1.10.4.1	Defining Pointers	1-44
1.10.4.2	Segment Pointers	1-44
1.10.4.3	Page Pointers	1-45
1.10.4.4	Bit Pointers	1-45
1.11	Scopes of Symbolic Names	1-46
1.11.1	Scope of Memory Class LOCAL	1-46
1.11.2	Scope of Memory Class PUBLIC	1-46
1.11.3	Scope of Memory Class GLOBAL	1-47
1.11.4	Promoting PUBLIC to GLOBAL	1-47

MACRO PREPROCESSOR 2-1

2.1	Introduction	2-3
2.2	m166 Invocation	2-4
2.3	Environment Variables	2-5

CONTENTS

2.4	m166 Controls	2-6
2.4.1	Overview m166 Controls	2-6
2.4.2	Description of m166 Controls	2-8
2.5	Creating and Calling Macros	2-28
2.5.1	Creating Parameterless Macros	2-28
2.5.2	Creating Macros with Parameters	2-34
2.5.3	Local Symbols in Macros	2-36
2.6	The Macro Preprocessor's Built-in Functions	2-38
2.6.1	Numbers and Expressions in m166	2-39
2.6.2	SET Function	2-40
2.6.3	EVAL Function	2-40
2.6.4	Control Flow and Conditional Assembly	2-41
2.6.4.1	IF Function	2-42
2.6.4.2	WHILE Function	2-44
2.6.4.3	REPEAT Function	2-45
2.6.4.4	BREAK Function	2-46
2.6.4.5	EXIT Function	2-46
2.6.4.6	ABORT Function	2-48
2.6.5	String Manipulation Functions	2-49
2.6.5.1	LEN Function	2-49
2.6.5.2	SUBSTR Function	2-50
2.6.5.3	MATCH Function	2-51
2.6.6	Logical Expressions and String Comparison in m166	2-53
2.6.7	DEFINED Function	2-54
2.6.8	Console I/O Built-in Functions	2-55
2.6.9	Comment Function	2-56
2.6.10	Overview Macro Built-in Functions	2-58
2.7	Advanced m166 Concepts	2-61
2.7.1	Definition and Use of Macro Names/Types	2-61
2.7.1.1	Definition of a Macro Call with DEFINE	2-62
2.7.1.2	Definition of a Macro Variable with SET	2-63
2.7.1.3	Definition of a Macro String with MATCH	2-63
2.7.2	Scope of Macro, Formal Parameters and Local Names	2-64
2.7.3	Redefinition of Macros	2-64
2.7.4	Literal vs. Normal Mode	2-64

2.7.5 Multi-Token Parameter 2-67
2.7.6 Variable Number of Parameters 2-68
2.7.7 Parameter Type STRING 2-69
2.7.8 Algorithm for Evaluating Macro Calls 2-72

ASSEMBLER 3-1

3.1 Description 3-3
3.2 Invocation 3-3
3.2.1 Input Files and Output Files 3-4
3.3 Sections and Memory Allocation 3-5
3.4 Environment Variables 3-5

ASSEMBLY LANGUAGE 4-1

4.1 Input Specification 4-3
4.2 Sections 4-4
4.2.1 Multiple Definitions for a Section 4-4
4.2.2 'Nested' or 'Embedded' Sections 4-5
4.3 Extend Blocks 4-7
4.4 The Software Instruction Set 4-7
4.5 Extended Instruction Set 4-10
4.5.1 Extend Blocks 4-10
4.5.2 Nesting Extend Blocks 4-11
4.5.3 Extend SFR Instructions 4-12
4.5.4 Operand Combinations in Extend SFR Blocks 4-13
4.5.5 Page Extend and Segment Extend Instructions 4-14

OPERANDS AND EXPRESSIONS 5-1

5.1 Operands 5-3
5.1.1 Operands and Addressing Modes 5-4
5.1.2 Operand Combinations 5-5
5.1.2.1 Abbreviations 5-6
5.1.2.2 Real Operand Combinations 5-8

CONTENTS

5.1.2.3	Virtual Operand Combinations	5-10
5.2	Expressions	5-11
5.2.1	Expressions in the Assembler	5-13
5.2.2	Number	5-15
5.2.3	Expression String	5-16
5.2.4	Symbol	5-17
5.3	Operators	5-17
5.3.1	Arithmetic Operators	5-18
5.3.1.1	Addition and Subtraction	5-18
5.3.1.2	Sign Operators	5-19
5.3.1.3	Multiplication and Division	5-19
5.3.1.4	Shift Operators	5-20
5.3.1.5	Relational Operators	5-20
5.3.1.6	Logical Operator	5-21
5.3.1.7	Bitwise Operators	5-21
5.3.1.8	Selection Operators	5-22
5.3.1.9	Dot Operator	5-22
5.3.2	Attribute Overriding Operators	5-24
5.3.2.1	Page Override Operator	5-24
5.3.2.2	PTR Operator	5-25
5.3.2.3	DATAn Operator	5-26
5.3.2.4	SHORT Operator	5-27
5.3.3	Attribute Value Operators	5-28
5.3.3.1	SEG Operator	5-28
5.3.3.2	PAG Operator	5-29
5.3.3.3	SOF Operator	5-29
5.3.3.4	POF Operator	5-30
5.3.3.5	BOF Operator	5-31
5.4	SFR and Bit Names	5-32
5.4.1	Special Function Registers (SFR)	5-32
5.4.2	Bit Names	5-33

ASSEMBLER CONTROLS 6-1

6.1 Introduction 6-3
6.2 Overview a166 Controls 6-4
6.3 Description of a166 Controls 6-9

ASSEMBLER DIRECTIVES 7-1

7.1 Introduction 7-3
7.2 Directives Overview 7-3
7.3 Debugging 7-5
7.4 Location Counter 7-5
7.5 Program Linkage 7-5
7.6 Directives 7-5

DERIVATIVE SUPPORT 8-1

8.1 Introduction 8-3
8.2 Differences Between ST10 and ST10 with MAC Co-Processor 8-3
8.3 Differences between C16x/ST10 and C166S v1.0 8-3
8.4 Differences between C16x/ST10 and XC16x/Super10 . 8-3
8.5 Differences between Super10 and Enhanced Super10 . 8-4
8.6 Enabling the Extensions 8-5
8.6.1 EXTEND Controls (assembler) 8-5
8.6.2 STDNAMES Control (assembler) 8-5
8.6.3 IRAMSIZE Control (locator) 8-6
8.6.4 EXTEND Controls (Locator) 8-6

LINKER/LOCATOR 9-1

9.1 Overview 9-3
9.2 Introduction 9-3
9.2.1 Linker/locator Purpose 9-4
9.2.2 Linker/locator Functions 9-4
9.3 Naming Conventions 9-5

CONTENTS

9.4	Locate Algorithm	9-6
9.4.1	Public and Global Groups	9-9
9.4.2	Combination of COMMON Sections	9-9
9.5	Invocation	9-10
9.6	Order of Object Files and Libraries	9-14
9.7	Environment Variables	9-15
9.7.1	User Defined Environment Variables	9-16
9.8	Default Object and Library Directories	9-18
9.9	Overview Input and Output files	9-19
9.10	Predefined Symbols	9-21
9.11	l166 Controls	9-24
9.11.1	The Module Scope Switch	9-25
9.11.2	Expressions	9-26
9.11.3	Overview of Controls per Category	9-28
9.11.4	Overview l166 Controls	9-32
9.11.5	Description of Controls	9-38

UTILITIES 10-1

10.1	Overview	10-3
10.2	ar166	10-4
10.3	cc166	10-8
10.4	d166	10-19
10.5	dmp166	10-25
10.6	gso166	10-27
10.6.1	Description	10-27
10.6.2	Memory Models	10-29
10.6.3	Memory Spaces	10-30
10.6.4	Pre-allocation Files	10-31
10.6.5	Creating gso Libraries	10-32
10.6.6	Reserved Memory Areas	10-33
10.6.7	Ordering .sif / .gso Files on the Command Line	10-34
10.6.8	Options	10-34
10.6.9	.gso/.sif File Format	10-36
10.6.10	Pre-allocation File Format	10-39

10.6.11 Example makefile 10-42
10.7 ieee166 10-43
10.8 ihex166 10-45
10.9 mk166 10-51
10.10 srec166 10-64

A.OUT FILE FORMAT A-1

1 Introduction A-3
1.1 File Header A-4
1.2 Section Headers A-5
1.3 Section Fillers A-6
1.4 Relocation Records A-6
1.5 Name Records A-7
1.6 Extension Records A-9
2 Format of a.out File as C Include File A-12

MACRO PREPROCESSOR OUTPUT FILES B-1

1 Assembly File B-3
2 List File B-4
2.1 Page Header B-5
2.2 Source Listing B-5
2.3 Total Error/Warning Page B-6
3 Error Print File B-6

ASSEMBLER OUTPUT FILES C-1

1 List File C-3
1.1 List File Header C-3
1.2 Source Listing C-4
1.3 Section Map C-7
1.4 Group Map C-9
1.5 Symbol Table C-9
1.6 Register Area Table C-12

1.7 XREF Table C-12
1.8 Total Error/Warning Page C-13
2 Error Print File C-13

LINKER/LOCATOR OUTPUT FILES D-1

1 Print File D-3
1.1 Print File Header D-3
1.2 Memory Map D-5
1.3 Symbol Table D-7
1.4 Interrupt Table D-8
1.5 Register Bank Map Link Stage D-9
1.6 Register Map Locate Stage D-10
1.7 Summary Control D-11
1.8 Error Report D-12

GLOBAL STORAGE OPTIMIZER ERROR MESSAGES E-1

1 Introduction E-3
2 Errors and Warnings E-3

MACRO PREPROCESSOR ERROR MESSAGES F-1

1 Introduction F-3
2 Warnings (W) F-3
3 Errors (E) F-5
4 Fatal Errors (F) F-9
5 Internal Errors (I) F-10

ASSEMBLER ERROR MESSAGES G-1

1 Introduction G-3
2 Warnings (W) G-3
3 Errors (E) G-15
4 Fatal Errors (F) G-32
5 Internal Errors (I) G-33

LINKER/LOCATOR ERROR MESSAGES H-1

1 Introduction H-3
2 Warnings (W) H-3
3 Errors (E) H-17
4 Fatal Errors (F) H-33
5 Internal Errors (I) H-36

CONTROL PROGRAM ERROR MESSAGES I-1

MAKE UTILITY ERROR MESSAGES J-1

1 Introduction J-3
2 Warnings J-3
3 Errors J-3

LIMITS K-1

1 Assembler K-3
2 Linker/Locator K-3

INTEL HEX RECORDS L-1

MOTOROLA S-RECORDS M-1

INDEX

CONTENTS

MANUAL PURPOSE AND STRUCTURE

PURPOSE

This manual is aimed at users of the C166/ST10 Cross-Assembler, Linker/Locator and utilities. It assumes that you are familiar with programming the C166/ST10.

MANUAL STRUCTURE

Related Publications
Conventions Used In This Manual

Chapters

1. Software Concept
   Describes the basics of modular programming, the interrupt concepts and memory models.

2. Macro Preprocessor
   Describes the action of, and options applicable to the macro preprocessor.

3. Assembler
   Describes the actions and invocation of the assembler.

4. Assembly Language
   Describes the formats of the possible statements for an assembly program.

5. Operands and Expressions
   Describes the operands and expressions to be used in the assembler instructions and directives.

6. Assembler Controls
   Describes the syntax and semantics of all assembler controls.

7. Assembler Directives
   Describes the pseudo instructions or assembler directives to pass information to the assembler program.

8. Derivative Support
   Describes the features of C166/ST10 derivatives such as the C16x/ST10 and the XC16x/Super10.

9. Linker/Locator
   Describes the action of, and options/controls applicable, to the linker and locator phase of **l166**.

10. Utilities
    Contains descriptions of the utilities supplied with the package, which may be useful during program development.

Appendices

A. A.out File Format
   Contains the layout of the output file produced by the package.

B. Macro Preprocessor Output Files
   Contains a description of the output files of the macro preprocessor.

C. Assembler Output Files
   Contains a description of the output files of the assembler.

D. Linker/Locator Output Files
   Contains a description of the output files of the link stage and locate stage of **l166**.

E. Global Storage Optimizer Error Messages
   Gives a list of error messages which can be generated by the global storage optimizer.

F. Macro Preprocessor Error Messages
   Gives a list of error messages which can be generated by the macro preprocessor.

G. Assembler Error Messages
   Gives a list of error messages which can be generated by the assembler.

H. Linker/Locator Error Messages
   Gives a list of error messages which can be generated by the linker/locator.

I. Control Program Error Messages
   Gives a list of error messages which can be generated by the control program.

J. Make Utility Error Messages
   Gives a list of error messages which can be generated by the make utility.

K. Limits
   Gives a list of limits of the assembler and the linker/locator.

L. Intel Hex Records
   Contains a description of the Intel Hex format.

M. Motorola S-Records
   Contains a description of the Motorola S-records.

RELATED PUBLICATIONS

- C166/ST10 C Cross-Compiler User's Manual [TASKING, MA019-002-00-00]
- C166/ST10 C++ Compiler User's Manual [TASKING, MA019-012-00-00]
- C166/ST10 CrossView Pro Debugger User's Manual [TASKING, MA019-041-00-00]
- C16x User's Manuals [Infineon Technologies]
- ST10 User's Manual [STMicroelectronics]
- ST10 Family Programming Manual [STMicroelectronics]
- XC16x / Super10 User's Manuals [Infineon Technologies / STMicroelectronics]

CONVENTIONS USED IN THIS MANUAL

The notation used to describe the format of call lines is given below:

{}	Items shown inside curly braces enclose a list from which you must choose an item.
[ ]	Items shown inside square brackets enclose items that are optional.
|	The vertical bar separates items in a list. It can be read as OR.
italics	Items shown in italic letters mean that you have to substitute the item. If italic items are inside square brackets, they are optional. For example: *filename* means: type the name of your file in place of the word *filename*.
...	An ellipsis indicates that you can repeat the preceding item zero or more times.
`screen font`	Represents input examples and screen output examples.
bold font	Represents a command name, an option or a complete command line which you can enter.

For example

```
command [option]... filename
```

This line could be written in plain English as: execute the command *command* with the optional options *option* and with the file *filename*.

Illustrations

The following illustrations are used in this manual:

This is a note. It gives you extra information.

This is a warning. Read the information carefully.

This illustration indicates actions you can perform with the mouse.

This illustration indicates keyboard input.

This illustration can be read as “See also”. It contains a reference to another command, option or section.

CHAPTER 1

SOFTWARE CONCEPT

TASKING

1 CHAPTER

1.1 THE MODULAR CONCEPT

1.1.1 MODULAR PROGRAMMING

The tools for the C166/ST10 program development enables the user to program in a modular fashion. The following sections explain the basics of modular program development.

The Advantages of Modular Programming

Many programs are too long or complex to write as a single unit. Programming becomes much simpler when the code is divided into small functional units. Modular programs are usually easier to code, debug and change than monolithic programs.

The modular approach to programming is similar to the design of hardware that contains numerous circuits. The device or program is logically divided into 'black boxes' with specific inputs and outputs. Once the interfaces between the units have been defined, detailed design of each unit can proceed separately.

Efficient Program Development

Programs can be developed more quickly with the modular approach since small subprograms are easier to understand, design and test than large programs. With the module inputs and outputs defined, the programmer can supply the needed input and verify the correctness of the module by examining the output. The separate modules are then linked and located into one program module. Finally, the completed module is tested.

Multiple Use of Subprograms

Code written for one program is often useful in others. Modular programming allows these sections to be saved for future use. Because the code is relocatable, saved modules can be linked to any program which fulfills their input and output requirements. With monolithic programming, such sections of code are buried inside the program and are not so available for use by other programs.

Ease of Debugging and Modifying

Modular programs are generally easier to debug than monolithic programs. Because of the well-defined module interfaces of the program, problems can be isolated to specific modules. Once the faulty module has been identified, fixing the problem is considerably simpler. When a program must be modified, modular programming simplifies the job. New or debugged modules can be linked to the existing program with the confidence that the rest of the program will not be changed.

1.1.2 MODULAR PROGRAMMING WITH C166/ST10 TOOLCHAIN

The TASKING C166/ST10 toolchain supports modular programming techniques with the following features and elements:

Include Capability

Source text parts occurring in the same form in several modules can be externally stored in files and, by means of $INCLUDE controls, included in the assembly in each module precisely where they are required.

Macro Capability

The **M166** macro preprocessor offers the possibility to combine frequently used instruction sequences and to define them as macro instructions. For a software development project, a macro library in the form of include files to be used by the entire development team can be set up. In addition, conditional assembly can be implemented via macro variables and macro control structures.

Library Management

Modules with uniquely defined input and output declarations which have already been compiled and tested and are to be used in several programs can be stored in library files. The use of libraries permits a program to be assembled using a major amount of 'finished parts' (library modules), thus significantly reducing the error rate and the testing effort during development.

Tasks

The software implementation of a task concept (see section 1.4 *The Task Concept*) aids the user in programming such program parts that fulfill a closely confined task as a unit. In general, these are responses of the application system to events reported by peripherals to the CPU. As a rule, such events are independent of each other and may require different system response times. Programming under the aspect of tasks therefore ensures a better logical separation and event-specific responses adjusted to the variety of tasks of a complex application system.

Procedures

In order to optimize the logical/functional structuring of a program, code fragments can be combined and defined in the form of procedures. Each procedure fulfills a small partial function which may be required at several points within a program. At such points, the procedure is simply invoked via a call instruction. Since procedures have defined input and output interfaces, they can be individually compiled and tested within a module.

Sections

The modular approach is based on the idea of relocatable code. In order to prevent data definitions and parts of code from being assigned to absolute memory addresses during the development of the source text, they can be integrated within relocatable sections. In a section, only the relative position of the data and/or code to the respective section basis is defined. A section as a compact unit, however, remains freely relocatable within the entire addressable memory space until locate-time.

Groups

Memory accesses are accomplished by means of a base address and an associated offset. Therefore, memory cells containing several sections located in the same page or the same segment, respectively, can be addressed using the same base address. The group directives permit several sections to be already combined during programming so that they will be located into the same page or segment without affecting the relocatability of the entire group. Sections contained in a group need not be individually specified at locate-time. A group can be located as a compact unit.

Classes

Combining several sections to form a class offers another possibility of chaining sections in spite of their relocatability. Class membership means that the sections are stored near to each other in the memory by the locator. Other than groups, classes may contain sections of different types (DATA, CODE, BIT), and page or segment boundaries may be exceeded. All sections belonging to one class can be located as a unit under the class name.

1.1.3 MODULE STRUCTURE

An assembler source module is a finite sequence of assembler statements which are, as a whole, compiled to an object module. The assembler source module thus represents the compilation unit of the assembler. The object module is the smallest unit that can be processed by the linker. Generally speaking, a module is to be understood as a program part that can be independently compiled, managed, and tested.

A modular program consists of several modules. A set of modules can be combined to a larger module, a task.

The term 'task' is explained in section 1.4.

Each source text file specified as an input file to the assembler must be a source module. A source module is identified by a name which may be specified in the NAME directive. In the absence of a NAME directive, the file name of the source module (without extension) is entered in the object module format as the module name. A source module is composed of statement lines and ends with an END directive. Any text lines after the END directive are ignored during assembly. A module contains one or more sections. The module definition (NAME-END) determines the scope of local symbols. Include files are pure text files and must not have the structure of a source module. The include files are inserted as text blocks in the text of a source module by the macro preprocessor.

Source modules cannot be nested. Each compilation unit may contain only one NAME directive and one END drive.

1.1.4 CONNECTIONS BETWEEN MODULES

The subdivision of a program into modules presumes that connections between modules are possible and that data and code of one module can be accessed from another module. Such connections are implemented in the TASKING C166/ST10 toolchain via assembler directives EXTERN, PUBLIC and GLOBAL. Before externally defined variables, labels, constants, subprograms or interrupt numbers can be accessed, the respective names and their type must be declared by means of the EXTERN directive. The EXTERN directive represents only one part of a module connection. Its counterpart is a PUBLIC or GLOBAL directive. Variables, labels, constants or subprograms which are accessed from other modules as well must be made know beyond the module boundary by means of PUBLIC or GLOBAL directives. The scope of PUBLIC declared symbols is the task (all modules of the task). The scope of GLOBAL declared symbols is the entire system.

If modules are viewed as independent blocks, then module connections should be regarded as, for example combination plug connections with ductile cables on these blocks. A connection can be set up only if the two plug elements show the same 'pin allocation', i.e. the same combination code with identical names and types. The ductile cables permit the blocks to be relocated to each other.

Note in this context that the name of an interrupt number and the name of a task procedure are automatically declared GLOBAL by the assembler.

The validity of module connections can, therefore, be checked only outside of the compilation process, not until link-time for EXTERN/PUBLIC and not until locate-time for EXTERN/GLOBAL.

1.2 PROCEDURES

The subroutine concept is one of the essential characteristics of efficient programming. It permits a sequence of instructions to be combined to form a procedure (subroutine) which may be called and executed at any point in another program.

On the hardware side, the procedure concept is supported by the processor via several CALL and RET instructions as well as the stack management instructions PUSH; POP; SCXT; MOV [-Rm],Rn; MOV Rn,[Rm+]. The last two instructions provide an easy means of setting up a user stack in addition to the system stack.

In support of the procedure concept the assembler provides language elements which significantly facilitate programming with procedures.

1.2.1 DEFINING A PROCEDURE

The PROC/ENDP directive permits all instructions delimited by this directive to be combined and defined as a procedure. The symbolic name generated by the procedure definition can be used in all CALL instructions. The assembler provides only one CALL instruction covering all types of procedure calls. The assembler automatically determines the required call instruction type from the combination of operands, type of procedure name, and call context.

Procedures may have several entry points. These entry points are defined as labels, using the LABEL directive if required. These labels must be of the same type as the procedure in which they are defined. They can be used in CALL instructions in much the same way as a procedure name.

In theory, procedures may be nested to any depth desired. The only restriction imposed in this respect is the size of the system stack.

1.2.2 PROCEDURE INTERFACES

A procedure should have a uniquely defined interface within its environment and access registers and data only via this interface. In order to meet this requirement, local registers must be made available within the procedure. The TASKING C166/ST10 toolchain concept offers several possibilities for this purpose:

- At the beginning of the procedure, the locally required registers are saved on the stack, and the original values are restored prior to exiting the procedure. For General Purpose Registers, the user stack may be used.
- A new register bank for local use within the procedure is defined on the system stack. For supplying parameters to a procedure, register of the system stack or a user stack may be used alternatively. (For more details, see section *Procedure Call Entry and Exit* in the C16*x* User's Manual [Infineon Technologies] which belongs to your target.)

For supplying parameters to procedures it is helpful if not only the actual data but also pointers to data can be supplied.

In order to facilitate the generation of pointers, the assembler directives DSPTR, DPPTR and DBPTR have been created. These directives serve to define pointers to procedures (DSPTR) and variables of type WORD (DPPTR), BYTE (DPPTR), and BIT (DBPTR).

The C166/ST10 supports no instructions to use these kind of full qualified pointers directly. The access to data via this must be implemented by user written macros. In order to minimize the system stack load, a user stack is recommended for supplying the parameters in the case of deeply nested procedures.

1.2.3 PROCEDURE TYPES

Due to code addressing via CSP (Code Segment Pointer) or IP (Instruction Pointer), a distinction must be made as to wether at the time of a procedure call the called procedure resides in the current segment or in a different segment. Depending on the location of the procedure relative to the calling program, the CSP register in addition to the current IP, may have to be saved on the system stack as the return address. If a different segment is addressed by a CALL instruction, this is referred to as a FAR-CALL. A CALL within the same segment is designated as NEAR-CALL. The called procedure must also be of type FAR or NEAR, in accordance with the CALL type. The type of the return instruction is implicitly determined by the type of the procedure.

It is a prerequisite to modular programming that the modules can be compiled separately and linked at some later time. As a result of relocatability, the memory segment in which a procedure will be placed is not defined until locate-time. In order to fully preserve this freedom in program assembly, type FAR must be defined for any procedure intended for general use.

1.3 INTERRUPT CONCEPTS

The C166/ST10 microcontroller is a processor essentially developed for control and monitoring functions. The nature of these functions requires that the processor must be able to respond to events occurring at unpredictable times within a defined time period. On the hardware side, a priority-controlled interrupt management has been implemented in support of this requirement. An event can thus request the processor via an interrupt. In such a case, depending on the priority, the processor will interrupt its current program and execute a subroutine which contains the absolutely required, time-critical processing. After that, the interrupted program is resumed, As a rule, the response to an external event is an independent program which can be executed at any time without significantly influencing the remaining activities of the processor.

Since the introduction of the C166/ST10 development tools have been available from Infineon. With these tools the Infineon Task Concept is introduced, an interrupt concept which is closely related to the architecture of the processor. For compatibility reasons the TASKING C166/ST10 toolchain supports the Task Concept since its introduction. With the Task Concept it is possible to introduce a high grade of modularity and code-reusability. However, for some users (used to the interrupt concepts of other tools) the Task Concept might be too restrictive. For this reason TASKING introduced the Flat Interrupt concept.

The following sections describe both the Task concept and the Flat Interrupt concept. It is recommended to read the section about the Task concept first, because the Flat Interrupt concept embodies also many aspects of the Task concept. It is possible that you use a mixture of both concepts. For users strictly following the Task concept, the control STRICTTASK must be supplied to assembler, linker and locator stage.

1.4 THE TASK CONCEPT

This section describes the strict definition of the Task concept, which means that the STRICTTASK control is set for assembling, linking and locating. Without this control, it is still possible to follow the Task concept, but the assembler and linker/locator will not check if a task has all attributes it should have.

A task in the TASKING C166/ST10 toolchain software concept is to be understood as an independent program part which fulfills a closely confined function and operates within its own environment (CSP, IP, PSW, GPRs). Quasi-multitasking, with several tasks using the processor in accordance with their priorities, has been implemented based on the priority-controlled interrupt management of the processor.

From the perspective of the processor, a task is defined by its interrupt number, its own register bank (GPRs), and its PSW, CSP, and IP.

1.4.1 HARDWARE SUPPORT OF TASKS

The C166/ST10 microcontrollers supports software structuring via tasks by offering the following features:

- Separate register bank for each task.
- PSW, CSP, and IP are automatically saved on the system stack during interrupt processing.
- Interrupt vector table for up to 127 functions, divided in system traps, hardware interrupts and software traps.
- Calling of a task via software using the special instruction TRAP.
- Context switching (switching of register banks) using the special instruction SCXT.
- Background servicing of an interrupt request with the PEC (Peripheral Event Controller) if simple data transfers are involved.
- Local register banks. (XC16x/Super10 only)

Since the CPU only initiates a task and provides a register bank, the user is offered language elements that permit the convenient and flexible allocation and management of the processor resources.

1.4.2 SOFTWARE SUPPORT OF TASKS

The TASKING C166/ST10 toolchain provides the programmer with the following additional language capabilities:

- A register bank with up to 16 registers can be allocated to task (REGBANK Directive).
- Register banks may overlap, thus permitting intertask communication via registers.
- The absolute location of the register bank need not be defined until locate-time.
- A task is defined by means of an interrupt procedure. When a task is defined, it can be assigned a symbolic name and a symbolic interrupt number.
- A task can be activated within another task via the symbolic interrupt number.
- The allocation of a symbolic interrupt number to a physical interrupt number need not take place until locate-time.
- Intertask communication is available via COMMON data areas.
- The scope of symbolic names and addresses can be extended beyond task boundaries by means of the GLOBAL directive. This permits data and code to be accessed beyond task boundaries.
- Procedures used by one task only, can be stored and managed as relocatable modules in designated application libraries (public libraries).
- A validity check of the allocation of processor resources is performed at locate-time.

When programming strictly in the Task concept (STRICTTASK control) with several tasks, the following restrictions should be noted:

- Only one task (interrupt procedure) may be programmed per source module.
- Only one register bank may be defined per task.

The hierarchical level of a task is between a system and a procedure. There is only one task possible within a module.

A program which contains tasks has the following structure:

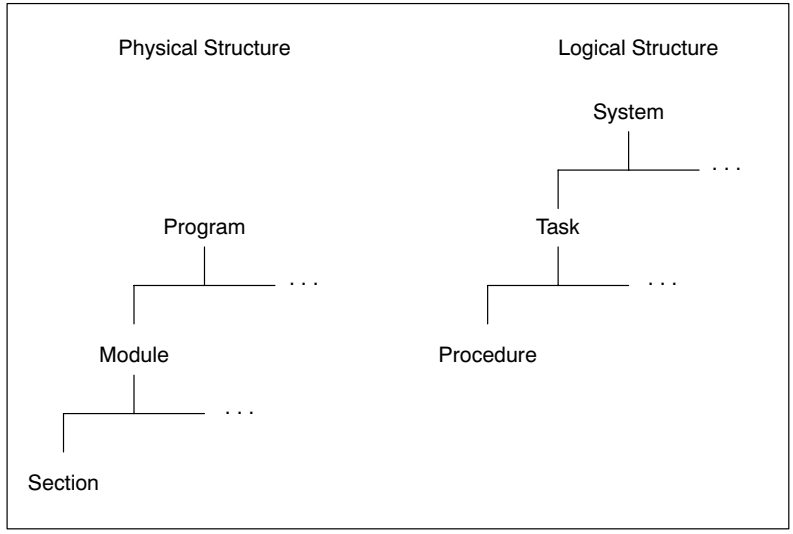

Figure 1-1: Physical and Logical Structure

1.4.3 STRUCTURE OF A TASK

A task is composed of a source main module and possibly several source submodules which can be individually programmed and compiled to relocatable object modules.

1.4.3.1 SOFTWARE DEFINITION OF A TASK

A task is defined in a main module. This main module must contain one (and only one) interrupt procedure definition. By means of the interrupt procedure definition, a symbolic start address, a symbolic name, and an interrupt number can be defined for a task. A symbolic name or an absolute number may be alternatively specified as the interrupt number. The procedure name of a task and the name of the interrupt number (task number) are automatically declared GLOBAL by the assembler.

Example:

```
TSKPROC    PROC TASK  TSKNAME INTNO = TSKNR
             .
             .
           RET
TSKPROC    ENDP
```

In addition to interrupt procedure, the task name and the task number, a register bank must be defined for a task. The register bank definition should be in the main module, but may also be contained in one of the submodules.

1.4.3.2 ATTRIBUTES OF A TASK

A task accordingly has the following attributes:

- Task name
- Task number (interrupt number)
- Task start address
- Register bank

The task name is a user defined name for a task.

The task number serves to allocate a task to a specific interrupt number (trap number or peripheral unit, respectively).

The start address of a task is required for initializing the interrupt vector table. This table is part of the hardware-based interrupt handling. The interrupt number is used by the hardware as an index of that table in order to access the start address of a task. The vector table can be set up automatically by the locator or via a separate initialization task.

The register bank of a task is the actual working area of a task. Each task has its own working area (register bank). It is, therefore, not necessary to save the contents of the working registers (GPRs) of a task when switching to another task via an interrupt.

All attributes of a task (except the task name to which no address or value corresponds) are relocatable; a task can, therefore, be programmed as an unit available for general use. It is not until locate-time that a task is assigned, via its attributes, to the processor resources (internal RAM, interrupt vector table). For special programming tasks, however, it is possible to absolutely define the attributes already in the assembler. The submodules of a task contain procedures which are, in general, used only in this task. Each submodule contains a register bank declaration. This declaration (REGBANK without name) notifies the assembler as to the register configuration of the register bank defined in the main module. In this manner, you can check already at assembly time whether only registers belonging to this task have been used. If more registers have been used, the linker issues a warning and expands the register bank to the correct length.

Example:

Register definition in the main module:

```
RBAST1 REGBANK R0 - R9
```

Register declaration in the submodules:

```
REGBANK R0 - R9
```

All modules of a task are linked by the linker to a larger relocatable 'task module'. Thus after the linker run, only one module exists for each task.

The locator fulfills the function of linking several tasks, distributing the processor resources and generating one program module from all input modules.

1.4.4 CONNECTIONS BETWEEN TASKS

Several tasks can communicate with each other by using shared data. Access can also be made from one task to the data and code of another task by COMMON sections. Fast access to data can be performed by COMREG registers.

To permit access to a name defined in a task from outside of this task, this name must be declared GLOBAL. The GLOBAL declaration extends the scope of a name from the local level to the program level. In contrast, a PUBLIC declaration is an extension of the scope of a name from a local level to a task level (a PUBLIC name cannot be accessed outside of a task). As such, a connection between tasks is produced via an EXTERN-GLOBAL declaration.

1.4.4.1 EXTERN-GLOBAL CONNECTION

If, in a module belonging to a task, access is to be made to a name not defined in this module, this name and its type must be reported to the assembler via the EXTERN directive. No distinction is made as to wether this name has been defined in another module of the same task or in another task.

If, on the other hand, a name defined in a module of a specific task is to be made available to other tasks, this name must to be made know beyond the module and task boundaries via the GLOBAL directive. A name declared GLOBAL can be accessed from any module of any task via an appropriate EXTERN declaration.

When a name is reported to the assembler via EXTERN directive, a decision cannot be made whether this connection is to be resolved with a suitable PUBLIC or GLOBAL declaration of this name. To have control over resolving EXTERN connections, a name that is declared GLOBAL must to be declared PUBLIC in any other module or task.

Example EXTERN-PUBLIC/ EXTERN-GLOBAL Connection.

Module A, Task A

```
PUBLIC AVAR          ; AVAR is declared public
                     ; AVAR can only be accessed
                     ; in Task A
GLOBAL BVAR          ; BVAR is declared global
                     ; BVAR can be accessed in
                     ; any Task

DSEC SECTION DATA
     .
     .
AVAR DW 8            ; AVAR is defined here
BVAR DB 4            ; BVAR is defined here
     .
DSEC ENDS

CSEC SECTION CODE
     ASSUME DPP2:AVAR
     .
CSEC ENDS
```

Module B, Task A

```
EXTERN DPP2:AVAR:WORD    ; extern declaration

CSEC SECTION CODE
     .
     .
     MOV R0, AVAR        ; AVAR is used here
     .
CSEC ENDS
```

Module A, Task B

```
EXTERN BVAR:BYTE         ; extern declaration

CSEC SECTION CODE
     .
     .
     MOV R0, BVAR        ; BVAR is used here
     .
CSEC ENDS
```

1.4.4.2 COMMON SECTIONS

Sections with equal names and the combine type common in several tasks will be placed by the locator at the same start address. These sections must have an identical length and must not belong to different classes. They may belong to a group if this group consists of only common sections. Common sections can be used to share data or code within several tasks.

Example with COMMON sections:

Module `task1.src`:

```
            EXTERN COMDAT:WORD
RBANK2      REGDEF R0

CSEC1       SECTION CODE
PROC1       PROC TASK TASK1 INTNO=1
            MOV  R0, COMDAT      ; access to common data
            RET
PROC1       ENDP
CSEC1       ENDS
            END
```

Module `task2.src`:

```
            EXTERN COMDAT:WORD
RBANK2      REGDEF R0

CSEC2       SECTION CODE
PROC2       PROC TASK TASK2 INTNO=2
            MOV  COMDAT, R0      ; access to common data
            RET
PROC2       ENDP
CSEC2       ENDS
            END
```

Module `common.src`:

```
            PUBLIC COMDAT

COMSEC      SECTION DATA WORD COMMON
COMDAT      DSW  1               ; storage for 1 word
COMSEC      ENDS
            END
```

All three modules are assembled. The two tasks are linked and located as follows:

```
l166 LINK task1.src common.src TO task1.lno
l166 LINK task2.src common.src TO task2.lno
l166 LOCATE task1.lno task2.lno TO common.out
```

When locating, COMMON sections with equal names are overlapped, i.e. located at the same address. In the example this means that the label COMDAT is located at the same address for both tasks, thus creating a data area which can be accessed from both tasks.

1.4.4.3 COMMON REGISTERS

Several tasks can communicate with each other via common register ranges as well. The common register ranges are defined in the COMREG directive. If tasks are to access common registers, the COMREG ranges defined in the tasks must be equal in size. See also the COMREG directive in the chapter *Assembler Directives*.

1.4.4.4 SAME MODULE IN SEVERAL TASKS

In addition, the same task module can be located into several tasks. For this purpose, the procedure name of task, the interrupt number, and the EXTERN names, if any, must be renamed at locate-time with the RENAME control, so that the allocation to the desired GLOBAL names and the entry of the start address in the interrupt vector table are made unambiguous.

1.5 THE FLAT INTERRUPT CONCEPT

This section describes the differences between the Flat Interrupt concept and the Task concept. It is recommended that you first read section 1.4, *The Task Concept*.

In this interrupt concept the public scope level is not used. This means that the link stage can be skipped. All assembler generated object files and libraries are directly input for the locate stage. This implies that the public level remains local within the assembly source modules. By means of the locator control PUBTOGLB you can 'flatten' the object files, i.e. promoting the public scope level to global. This means that an interrupt procedure in the Flat Interrupt concept can easily share code, data and register banks with other interrupt procedures.

It is still possible to combine a set of modules with interrupt functions (e.g. having the same interrupt level) to one larger (linker-)object module with its code and data unaccessible for other modules of the application. This larger module is build by the linker stage and can be compared with the modules formed by a task in the Task Concept. But in the Flat Interrupt concept the restrictions stated for the Task concept do not exist. So:

- unlimited number of interrupt procedures per source module may be programmed.
- you are allowed to define an unlimited number of register banks per source module

In the Task concept register banks with equal names are treated as different register banks. In the Flat Interrupt concept register banks with equal names are treated as the same register bank. The linker or locator will issue a warning when register banks with equal names do not have equal definition and the definitions are combined.

Summarized the following rules determine which concept is used:

- when assembler, linker and locator stage are invoked with the STRICTTASK control and the PUBTOGLB control is not used, the Task concept is followed.
- when the PUBTOGLB control is used for all input modules of the locator and the STRICTTASK control is never used, the Flat Interrupt concept is followed.
- if none of the two rules mentioned above is fully fulfilled, a mixture of both concepts is used.

The following figures show examples of an application built with both concepts and an example mixing both concepts.

Example

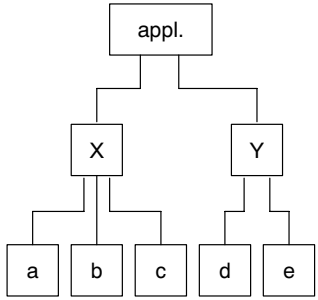

Figure 1-2: Example: Task Concept

The Task concept: The application consists of two tasks `X` and `Y`. Each task consists of several assembly modules (`a`, `b`, `c`, `d` and `e`). In this example module `a` defines the Task procedure for task `X` and module `d` defines the Task procedure for task `Y`. The invocations of assembler linker and locator looks like:

```
a166 a.src STRICTTASK
a166 b.src STRICTTASK
a166 c.src STRICTTASK
a166 d.src STRICTTASK
a166 e.src STRICTTASK
l166 LINK STRICTTASK a.obj b.obj c.obj TO x.lno
l166 LINK STRICTTASK d.obj e.obj TO y.lno
l166 LOCATE STRICTTASK x.lno y.lno TO appl.out
```

Example

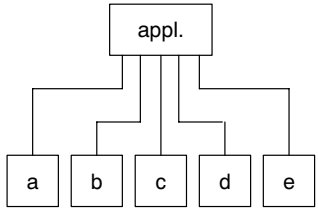

Figure 1-3: Example: Flat Interrupt Concept

The Flat Interrupt concept: the application consists of five assembly modules (`a` to `e`). Module `a` and `d` contain definitions of interrupt procedures. The invocations of assembler and locator looks like:

```
a166 a.src
a166 b.src
a166 c.src
a166 d.src
a166 e.src
l166 LOCATE PUBTOGLB a.obj b.obj c.obj d.obj e.obj
     TO appl.out
```

Example

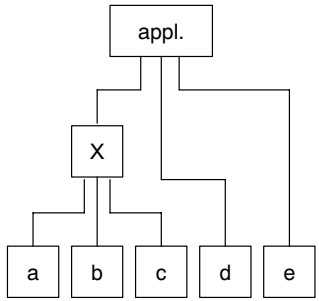

Figure 1-4: Example: Mixed Concepts

Mixed concepts: the application consists of task `X` and module `d` and `e`. The task `X` consists of modules `a`, `b`, and `c`. Module `a` and module `d` contain interrupt procedures. The invocations of assembler linker and locator looks like:

```
a166 a.src
a166 b.src
a166 c.src
a166 d.src
a166 e.src
l166 LINK a.obj b.obj c.obj TO x.lno
l166 LOCATE x.lno d.obj PUBTOGLB e.obj PUBTOGLB
     TO appl.out
```

1.6 LOGICAL MEMORY SEGMENTATION (SECTION, GROUP, AND CLASS)

The C166/ST10 microcontrollers can directly address 256 Kbytes. This memory area is addressed by the CPU via one code segment and four data pages. The segment and the 4 data pages have the effect of a mask placed on the full 256 Kbytes memory area. This means that the CPU can, at any particular time, address only those memory areas visible through this mask.

For code accesses, the entire address range is divided into 4 segments of 64 Kbytes each. The segments are identified by segment numbers 0 to 3. A segment number represents the two highest-order bits of the physical start address of the segment concerned. The segment number of the current segment is stored in the register CSP.

For data accesses the entire address range is divided into 16 pages of 16 Kbytes each. The pages are identified by page numbers 0 to 15. A page number is represented by the 4 highest-order bits of the physical start address of the page concerned. The page numbers of the four current pages are stored in the registers DPP0 to DPP3.

Segment 0 is of particular significance, since the processor resources are accommodated in this segment. For more details about the memory organization in segment 0, see section *Memory Organization* in the C16*x* User's Manual [Infineon Technologies] which belongs to your target.

1.6.1 THE TERM 'SECTION'

In order to implement the modular approach, it is required that this hardware-based memory organization has a software equivalent that can be used at the logical program development level. The equivalent of a physical segment or a physical page, respectively, is the SECTION at the logical level.

1.6.1.1 ATTRIBUTES OF A SECTION

A section is defined in the assembler language via the SECTION/ENDS directive. By means of the attributes of a section, such as 'section-type', 'align-type', 'combine-type', and 'class-name' any additional information required for a section can be defined. The 'section-type' is used to allocate a section to segment (CODE), to a page (DATA, PDAT or BIT), to a sequence of pages (LDAT) or to all memory (HDAT). Specification of an 'align-type' permits a section to be aligned to byte or word boundaries or, if required, to be located in a bit-addressable or PEC-addressable memory area. The 'combine-type' specifies how sections with the same name, which are defined in different modules, will be combined. Via a 'class-name' several sections can be combined to be physically located in a definable memory range. This does not mean the sections to be sequentially ordered in memory.

All data definitions and assembler instructions must be contained within a section, with data definitions usually found in sections of type DATA, PDAT, LDAT or HDAT and instructions in sections of type CODE. This arrangement, however, is not mandatory. It is possible to define data in sections of type CODE. However this results in restrictions (e.g. a page boundary cannot be exceeded) of the (code) section attributes.

1.6.1.2 GENERATING ADDRESSES IN A SECTION

A section is to be regarded as a 'block' that is freely relocatable within the memory. All addresses within a section are offsets relative to the section base (section offset). Accordingly, a logical address is composed of two parts: a section reference (section index) and a section offset. By means of these two items of information, all addresses can be kept freely relocatable until locate-time without affecting the logical connections to these addresses.

It is not until locate-time that the absolute location of a section within a physical address space is determined and the base address of a section is thus defined. The base address is the physical address of the first byte of a section and is composed of a page or segment number and an offset of the section beginning relative to the beginning of this physical page or segment. The locator generates the absolute address of a variable or a label by removing from the section base the page or segment number, respectively, and forming the physical page offset or segment offset, respectively, from the remaining offset portion of the section base and the section offset.

All physical addresses within a page or a segment can be formed using the same page number or segment number, respectively, and the appropriate page offset or segment offset. On the logical side, all variables and labels of a section have the same section base and their respective section offset. To ensure an unambiguous relationship between the logical and the physical address, a section of type DATA or PDAT must not exceed one page (16 Kbytes), and a section of type CODE or LDAT must not exceed one segment (64 Kbytes). Sections may consist of several parts defined either in the same module or in different modules.

1.6.2 THE TERM 'GROUP'

An n:1 relationship exists between section and page or segment, respectively. Several small sections may be located into the same segment. It should be noted, however, that no section may exceed the page or segment boundary when you want to combine sections to form a group. All sections located in the same page or the same segment have the same page or segment number in their base address. As a result, all addresses from within sections located in the same page can be formed without reloading, using the same DPP register, and all addresses from within sections located in the same segment can be formed, without reloading, using the CPS register. In order to make use of this physical aspect already on the logical level during program development, the assembler offers two group directives (DGROUP, CGROUP). The GROUP directives permit several sections from the same module or from different modules to be combined to form a group. All sections belonging to the same group have the same page or segment number, respectively. It should be noted that the total size of a data group must not exceed 16 Kbytes, and the total size of a code group must not exceed 64 Kbytes.

The use groups offers the advantage that a DPP register has to be loaded only once for several sections and that, at locate-time, a group can be managed as a whole.

Section names and group names can be used in instructions with immediate addressing and represent the number of the page or segment in which the respective section or group is contained. The DPP registers can thus be reloaded with the page numbers of data sections or data groups.

Example:

```
MOV DPP0,#PAG DSEC        ;DSEC is a section name
MOV DPP1,#PAG DATAGRP     ;DATAGRP is a group name
```

1.6.3 THE TERM 'CLASS'

Combining several sections to form a class (by specifying the same class name in the section definitions) offers advantages similar to those of groups. A class can be managed as a whole at locate-time. As distinct from a group, a class may extend over several pages or segments, respectively. The sections may, therefore, have different page or segment numbers. A class name has no base and cannot be used for data initialization and instructions. A class may contain sections of type DATA, LDAT, PDAT, HDAT, BIT as well as sections of type CODE.

When combining sections to form groups and classes, special care should be taken to avoid grouping conflicts. For example: If two sections belonging to the same class are each defined in a group as well, a conflict may arise at locate-time when an attempt is made to locate the groups other than in sequential order.

1.7 MEMORY MODELS

When working with the C166/ST10 assembler toolchain, a memory model has to be chosen. Each memory model has a different approach of code and data and a different maximum amount of code and data. The assembler and locator have to be told which model is used by means of controls. The limits and location depend on the setting of these controls. For the assembly programmer there are three memory models (see sections 1.7.3, 1.7.4 and 1.7.5). One model requires the CPU to run with segmentation disabled, the others require the CPU to run with segmentation enabled.

1.7.1 CPU MEMORY MODE

The C16x/ST10 has two memory modes: segmentation enabled and segmentation disabled. Which one is active depends on the SGTDIS bit in the SYSCON register.

If the SGTDIS bit is '1', segmentation is disabled. The entire memory range is restricted to 64 KBytes (segment 0) and all addresses can be represented by 16 bits. Only the two least significant bits of the DPP registers are used for physical address generation. The contents of the CSP register is ignored. On interrupts the C16x/ST10 does not have to save the CSP register and an extra port (Port 4) is available, because address line A16 - A17 (or A16 - A23 for the C16x/ST10) are not used.

If the SGTDIS bit is '0', the segmentation is enabled. The CSP register is used to address code and the DPP registers are used to address data.

1.7.2 ASSEMBLER MEMORY MODELS

The assembler has two controls to control the memory model:

SEGMENTED/NONSEGMENTED	
MODEL(*model*)	where *model* is one of NONE, TINY, SMALL, MEDIUM, LARGE or HUGE

The NONSEGMENTED control initializes the assembler to use full 16 bit addresses for data instruction operands. DPP-prefixes and the ASSUME directive cannot be used. In NONSEGMENTED mode the assembler accepts all types of sections.

The SEGMENTED control initializes the assembler to use DPPs. The assembler expects the use of DPP-prefixes or the ASSUME directive for data addresses as instruction operands. The CPU runs in the segmented mode. If the SEGMENTED control is set the assembler does not accept LDAT and PDAT sections.

The MODEL control is introduced for C compiler support. This control indicates the C16x/ST10 memory model. The linker and locator check if all input modules have the same model. Using NONE as model (default) never causes any conflict with other models. Although this control is introduced for C compiler support, the assembly programmer can use this control for setting the SMALL model. The assembler and locator allow other memory usage for the SMALL model. When using the SMALL model the CPU has to run in the segmented mode. Other arguments (TINY, MEDIUM, LARGE and HUGE) for the MODEL control are only used for detecting model conflicts while linking and locating C programs.

In general we can distinguish three models for the assembly programmer:

NONSEGMENTED:	CPU non-segmented, assembler segmented
NONSEGMENTED/SMALL:	CPU segmented, assembler non-segmented
SEGMENTED:	CPU segmented, assembler segmented

The properties of each model are described in the next sections.

1.7.3 NONSEGMENTED MEMORY MODEL

Assembler controls:

NONSEGMENTED
MODEL(NONE) or MODEL(TINY)

NONSEGMENTED and MODEL(NONE) are the defaults for the assembler.

CPU:

The CPU runs with segmentation disabled.

Sections:

Type	Approach	Max.size	Location
CODE	segmented	64KB	first segment
DATA	paged	16KB	first segment
LDAT	linear	64KB	first segment
HDAT	non-paged	64KB	first segment
PDAT	paged	16KB	first segment

Locator controls:

It is not possible to locate any sections outside the first segment. The controls ADDRESSES, SETNOSGDPP and CLASSES do not accept addresses outside the first segment.

C16x/ST10 memory model:

This memory model is the 'tiny' model for C16x/ST10.

Description:

The assembler uses full 16 bit addresses for addressing data with instructions. It is not possible to use DPP-prefixes and the ASSUME directive. And sections cannot be located at an address higher than 0FFFFh, because the CPU runs with segmentation disabled. The four DPP registers contain 0, 1, 2 and 3. This makes it possible to cross page boundaries without loading a DPP register for data access. LDAT sections should be used for this purpose.

1.7.4 NONSEGMENTED/SMALL MEMORY MODEL

Assembler controls:

NONSEGMENTED
MODEL(SMALL)

CPU:

The CPU runs with segmentation enabled.

Sections:

Type	Approach	Max.size	Location
CODE	segmented	64KB	anywhere
DATA	paged	16KB	first segment
LDAT	linear or paged	64KB 16KB	anywhere anywhere
HDAT	non-paged	-	anywhere
PDAT	paged	16KB	anywhere

Locator controls:

To locate LDAT sections outside first segment, the controls ADDRESSES LINEAR and SETNOSGDPP can be used. If SETNOSGDPP is used, all LDAT sections are paged instead of linear.

C16x/ST10 memory model:

This memory model is the 'small' model for C16x/ST10.

Description:

For this memory model the assembler uses full 16 bit addresses for data instruction operands. DPP-prefixes and the ASSUME directive cannot be used. The CPU runs with segmentation enabled, which implies that DPPs are used for addressing data anywhere in memory. However, the assembler does not accept DPP-prefixes or the ASSUME directive, which means the DPPs are used linear. The predefined assembler symbols ?BASE_DPP0, ?BASE_DPP1, ?BASE_DPP2 and ?BASE_DPP3 should be used to initialize the DPP registers. These symbols are assigned by the locator to the physical pages addressed with each DPP. The only sections which can be addressed this way are LDAT sections. For addressing DATA, PDAT or HDAT sections the DPP registers should be loaded correctly. For addressing a label from a DATA, PDAT or HDAT section, it is recommended to use DPP0 because the POF operator can be used for making the two most significant bits, representing the DPP number, zero. The POF operator replaces the DPP prefix, which is not allowed.

Example:

In this example the `pdat_label` is defined in a PDAT section. The same construction can be used for labels which are defined in a DATA or HDAT section.

```
MOV DPP0, #PAG pdat_label  ; load DPP0
MOV R0, POF pdat_label     ; access data via DPP0
MOV DPP0, #PAG ?BASE_DPP0  ; restore DPP0
MOV DPP0, ldat_label       ; access linear data
```

If all data (DATA, HDAT, LDAT and PDAT) is located in the first segment, this way of addressing is not needed. In that case, the only advantage of this memory model in is the possibility to locate code sections outside the first segment.

The next three examples illustrate different ways the LDAT sections can be located.

Map example **I**

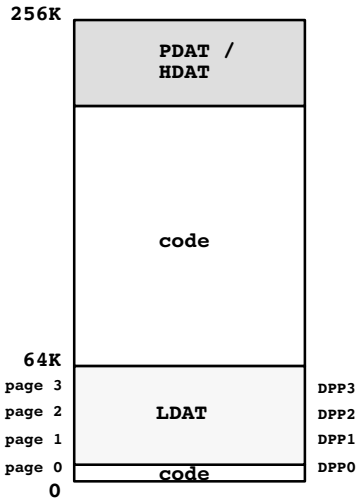

(Default)

Map example **II**

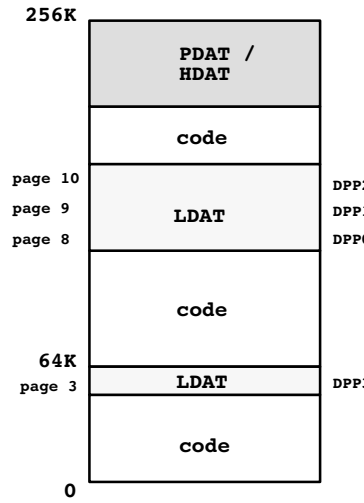

Using locate control:

AD LINEAR(page 8)

LDAT sections can contain both RAM data and ROM data.

Map
example **III** Using locate control:

SND(DPP0(10), DPP1(12), DPP2(7))

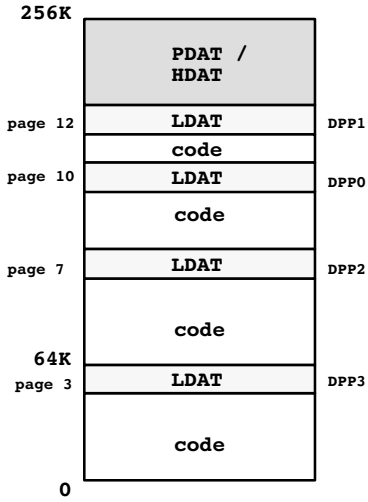

DATA sections in the NONSEGMENTED/SMALL memory model are equal to PDAT sections, but restricted to the first segment.

1.7.5 SEGMENTED MEMORY MODEL

Assembler controls:

SEGMENTED
MODEL(NONE), MODEL(MEDIUM), MODEL(LARGE) or MODEL(HUGE)

CPU:

The CPU runs with segmentation enabled.

Sections:

Type	Approach	Max.size	Location
CODE	segmented	64KB	anywhere
DATA	paged	16KB	anywhere
LDAT	n/a	–	–

Type	Approach	Max.size	Location
HDAT	non-paged	-	anywhere
PDAT	n/a	-	-

Locator controls:

In this memory model the assembler does not accept LDAT and PDAT sections. Using the ADDRESSES LINEAR and SETNOSGDPP controls is not allowed.

C16x/ST10 memory model:

This memory model is the 'medium', 'large' or 'huge' model for C16x/ST10. For the assembly programmer there is no difference between those C-compiler memory models.

Description:

The assembler expects the use of DPP-prefixes or the ASSUME directive for data addresses as instruction operands. This also implies that the CPU has to run with segmentation enabled. Because all addressing is done via the DPP registers, LDAT sections can not be used in this memory model. Like PDAT sections in the NONSEGMENTED/SMALL model, DATA sections can be located anywhere in memory in the SEGMENTED MODEL.

1.8 REGISTERS

The C16x/ST10 contains two types of registers: GPRs (General Purpose Registers) and SFRs (Special Function Registers). (For a detailed explanation, see section *Register Address Space* in the C16*x* User's Manual [Infineon Technologies] which belongs to your target.)

1.8.1 LOCATION OF REGISTERS

Due to the architecture of the microcontroller, all registers are located in the addressable memory space. The SFRs are located at hardware defined addresses in the upper range of page 3 (segment 0). The location of the GPRs can be defined by the user within the internal RAM by means of the CP register (Context Pointer).

1.8.2 ACCESSING REGISTERS

For reasons of the technical design, several addressing modes have been implemented for registers in order to achieve an instruction code as short and as quick to execute as possible.

The SFRs are usually addressed via a register number (0 to 240). This corresponds to the 'REG' operand type (see chapter *Operands and Expressions* in this manual). Symbolic names which serve as placeholders for the corresponding SFR numbers are available in the assembler for all SFRs.

All SFRs can be accessed as words. Byte access is possible only to the LOW byte,with the exception of GPRs R0 to R7, which are used as RL0, RH0 to RL7, RH7. In addition, special attention should be paid to setting the HIGH byte to 0 whenever a byte-oriented write access is made to the LOW byte of a SFR (with the exception of the GPRs). All SFRs residing in the bit-addressable range can be accessed as bits as well.

If the addressing mode cannot be unambiguously derived from the types of the two operands of an instruction intended to access a SFR, a PTR operator must be applied to one of the operands.

The GPRs are, in general, accessed via a register offset (register numbers 0 to 15) relative to the CP (Context Pointer). This corresponds to the 'Rn' operand type. The CP contains an absolute address in the internal RAM. Starting at this address, 16 memory locations can be addressed as GPRs via the appropriate register offsets. Symbolic register names which serve as placeholders for the corresponding register offsets (register numbers) are available in the assembler for the GPRs. The first eight GPRs can be addressed as words (R0 to R7) or as bytes (RL0,RH0 to RL7,RH7). GPRs R8 to R15 can be addressed as words. This restriction is a result of the compact operation code, since only 4 bits are available in the instruction format for coding a register number. All GPRs can also be addressed as bits, providing they reside in the bit-addressable range of the internal RAM.

Two operand formats ('REG' and 'Rn') can be allocated to register names R0 to R15 and RL0,RH0 to RL7,RH7. The assembler decides automatically which of the two operand formats is required for a given instruction. If an instruction permits both formats, the assembler chooses the format with the shorter instruction code.

The instruction:

```
MOV R0,R1
```

permits, e.g., only the operand format Rn,Rm. In this case, the assembler uses the addressing mode on CP and register numbers (R0=0, R1=1)

However, for the instruction:

```
MOV R3,#1234H
```

only the operand combination REG,#data16 is available. The assembler converts the instruction to the format:

```
MOV (0F3H),#1234H.
```

if several operand combinations are possible, such as Rn,#data4 (4 bytes) in the instruction:

```
MOV R4,#0EH
```

The assembler selects the addressing mode which generates the shorter instruction code.

For further explanation, see section *General Purpose Registers* in the C16*x* User's Manual [Infineon Technologies] which belongs to your target.

As a result of their location in the addressable memory, all SFR registers can also be addressed as normal memory locations via the appropriate addresses. For this form of addressing it should be noted that, given an operand of type 'MEM', the two highest-order bits identify a DPP register and are not part of the absolute address.

The instruction:

```
MOV 0FEB0H,R0
```

loads e.g. the S0TBOF register. In order for this instruction to function correctly, the value 3 for page 3 must be present in the DPP3 register. The number 0FEB0H will be interpreted by the assembler in two parts: 11 - 11.1110.1011.0000Y (DPP and page offset).

1.8.3 REGISTER BANKS

The 16 GPRs that can be addressed via the same Context Pointer form a unit called **register bank**. The location of a register bank can be determined by the contents of the CP register (contains the base address of the register bank).The size of a register bank is limited to a maximum of 16 registers, since a register number may occupy only 4 bits in the instruction format. A register bank may also contain less than 16 registers. If several register banks are used in a program, space can be saved by defining the Context Pointers such that the register banks succeed one another without gaps.

With register banks using less than 16 registers, this results in a possibility of inadvertently altering the registers of the subsequent register bank. In order to be able to discover such errors already during the development of a program and to define register banks as relocatable units, the special directives REGDEF, REGBANK and COMREG have been implemented in the assembler.

1.8.3.1 DEFINING REGISTER BANKS

The register bank definition is an important component part of the task concept.

The REGDEF and REGBANK directives offer the following possibilities:

- **Definition** of a symbolic name for the register bank.
  This symbolic name represents the base address of a register bank and can be used to load the CP for the purpose of switching to the appropriate register bank.
- The REGDEF or REGBANK directive can be used to both define and declare a register bank. A REGDEF or REGBANK directive without a name is regarded as a **declaration**. Register bank declarations are, in general, used in submodules of a task to inform the assembler as to the register configuration defined in the main module. It can thus be checked wether only registers permitted in this task have been used.

The REGDEF, REGBANK and COMREG directives offers the following possibilities:

- Definition of the size and the range of a register bank.
  A register bank can be subdivided into several ranges. These ranges can be defined with the REGDEF, REGBANK or COMREG directives. With REGBANK defined register ranges contain registers only addressable within the respective register bank. Several register banks may overlap via COMREG areas, thus permitting intertask communication via register contained in this range.

Example:

```
REGBAS REGDEF R0-R5 PRIVATE, R6-R7 COMMON=COMAREA
```

Is the same as:

```
REGBAS    REGBANK R0 - R5
COMAREA   COMREG  R6 - R7
```

A register bank defined using REGBANK is relocatable. The absolute address of the register bank is not defined until later in the locator. Although, when using COMREG ranges, a firm interconnection of the register banks concerned is already established during development, this combination as a whole remains relocatable.

1.9 USE OF THE PEC (PERIPHERAL EVENT CONTROLLER)

The C166/ST10 supports 8 PEC channels which permit interrupt controlled data transfer (BYTE or WORD) from or to segment 0. A counter/control register (located in the bit-addressable SFR range) and one target and source pointer each (located in the bit-addressable RAM range (0FDE0H-0FDFFH) belong to each channel. Since these PEC pointers are not located in the SFR range, they can only be addressed as MEM type or as GPRs.

Whenever the PEC is used, some of the upper 16 memory words in the internal RAM are occupied. Depending on which channels are programmed, open gaps remain in the memory area in which the PEC pointer resides. In order to be able to fill such gaps with small bit-addressable sections at locate-time, the locator must be notified as to which channels are in use.

The PEC channels used are declared in the assembler by means of the PECDEF directive. This information is passed on to the locator.

See section 8.4, *Differences between C16x/ST10 and XC16x//Super10*, for PEC pointer differences.

1.9.1 ADDRESSING AS MEM TYPE

If the PEC pointers are to be addressed with their system name, this can only be done via DPPn. DPPn must be loaded with page number 3.

1.9.2 ADDRESSING AS GPRS

Since the PEC pointers are located in the internal RAM area, they can also be addressed as GPRs.

For this purpose, the Context Pointer (CP) must be loaded with the address of the SRCP0 (0FDE0H).

A PEC table (an area to which the PEC service writes data or from which it reads data) can only located in segment 0. To ensure this, the PEC table must be defined in a section with the align-type PECADDRESSABLE.

1.10 DEFINING AND ADDRESSING MEMORY UNITS

The following data units can be defined in the assembler;

- Memory bits (1 bit)
- Memory bytes (8 bits)
- Memory words (16 bytes)
- Memory areas (n bytes)
- Memory areas (n words)
- Code pointers (2 words)
- Data pointers (2 words)
- Bit pointer (3 words)

1.10.1 BASIC DATA UNITS

1.10.1.1 DEFINING BASIC DATA UNITS

The basic data units of type bit, word, and area are used for the general storage and management of data. They are defined via the memory reservation directives DBIT (Define Bit), DB (Define Byte), DW (Define Word), DDW (Define Double Word) and DS, DSB, DSW and DSDW (Define Storage). When defining a memory unit, it may be given a symbolic name representing the address of this memory unit. Byte, word and area addresses are expressed by offsets in byte units. In sections of DATA, LDAT, PDAT, HDAT and CODE, the location counter is counter in byte units in ascending order. Bit addresses are expressed by offsets in bit units. Consequently, DBIT directives may only be used in sections of type BIT. In such sections, the location counter in bit units in ascending order.

1.10.1.2 ADDRESSING BASIC DATA UNITS

The symbolic names of basic data units can be used in assembler instructions to access the addresses (immediate addressing mode) or the contents (direct addressing mode) of the base data units (variables).

Example:

```
MOV  DPP0, #PAG WORDVAR     ;Access to the address
MOV  R0, #DPP0:WORDVAR      ;of WORDVAR
MOV  R1, [R0]               ;Access to WORDVAR,
                            ;indirectly via R0
MOV  R2, DPP0:WORDVAR       ;Direct access to WORDVAR
MOV  BITVAR, R3.1           ;Direct access to BITVAR
```

1.10.2 VARIABLES AND LABELS

After registers, variables and labels are the two most referenced objects. These objects are defined in a program. Variables refer to data items, areas of memory where values are stored. Labels refer to sections of code that may be JuMPed to or CALLed. Each variable and label has a unique name in the program.

Variables

A variable can be defined through a data definition statement, the LABEL directive or the BIT directive. Each variable has three attributes: section, offset and type:

Section: This is the index to the section. It is a value that is a handle to have access to the base address (start) of the section.

Offset: This is the offset (current location counter) of the variable or label defined. It is a value that represents the distance in bytes (or bits) from the base (start) of the section to the point in memory where the variable is defined. In sections of type BIT the offset is counted in bit units.

Type: This is the size of the data items in bytes. There are three possible types:

BIT	one bit
BYTE	one byte
WORD	one word

Labels

Labels define addresses for executable instructions. They represent a 'name' for a location in the code. This 'name' or label is a location that can be JuMPed to or CALLed from. A label can be an operand of a JMP or CALL instruction. A label can be defined in three ways:

- a name followed by a ':' (e.g. LAB1:)
- a LABEL directive
- a PROC directive

Like a variable, a label has three attributes, two are the same as those of a variable:

Section: Same as variable.

Offset: Same as variable.

Type: Specifies the type of JuMP or CALL that must be made to that location. There are two types:

NEAR: This type represents a label that is accessed by a JuMP or CALL that lies within the same physical segment. In this case, only the offset of the label is used in the JuMP or CALL instruction.

FAR: This type represents a label that is accessed from a different segment. A far label is represented in the JuMP or CALL instruction by its offset and its segment number.

A special form of defining a label is the PROC directive. This form specifies a sequence of code that is CALLed just as a subroutine in a high-level language. The PROC directive defines a label with the type, either NEAR or FAR. It also defines a context for the RET instruction so that the assembler can determine the type of RET to code (either RET or a RETS).

When you define a variable or label, the assembler stores its definition, which includes the above attributes.

1.10.2.1 DEFINING CODE LABELS

'Code' labels can be defined by:

label:

or

label: {NEAR|FAR}

or

label: *instruction*

label is a unique **a166** identifier and *instruction* is an **a166** *instruction*. When used in DATA sections **a166** reports a warning on. This *label* has the following attributes:

Section: the index to the section being assembled.

Offset: the current value of the location counter.

Type: is NEAR if keyword NEAR is used.
is FAR if keyword FAR is used.

If no keyword is used, the type depends on the section type in which the label is used:

- In CODE sections the 'Code' label type is specified by the PROC type.

  Example:

```
CSEC SECTION   CODE
PR        PROC  NEAR; PROC type is NEAR
LABF:FAR       ; Label type is FAR
ABC: RET       ; Label type is NEAR
PR        ENDP
CSEC ENDS
```

  The *label* must be defined on an even address, otherwise **a166** issues a warning and corrects it to the next even address.

- In DATA sections the 'Code' label type is always NEAR. **a166** reports a warning.

  Example:

```
DSEC SECTION DATA
LAB1:          ; type NEAR, warning
AVAR DW  2
DESC ENDS
```

CONCEPT

1.10.2.2 DEFINING DATA LABELS

'Data' labels can be defined by:

label

or

label {BYTE | WORD}

label is a unique **a166** identifier. When used in CODE sections **a166** reports a warning. This *label* has the following attributes:

Section: the index to the section being assembled.

Offset: the current value of the location counter.

Type: is BYTE if keyword BYTE is used.
is WORD if keyword WORD is used.

If no keyword is used, the type depends on the section type in which the label is used:

- In DATA sections the 'Data' label type is specified by the align-type of SECTION.

  Example:

```
DSEC SECTION DATA   ; align type is WORD
LABA           ; Label type is WORD
LABB BYTE      ; Label type is BYTE
AVAR DB 2
DSEC ENDS
```

- In CODE sections the 'Data' label type is always WORD. **a166** reports a warning.

  Example:

```
CSEC SECTION   CODE
PR         PROC
LABA       ; Label type is WORD
                ; warning
           RET
PR         ENDP
CSEC ENDS
```

1.10.3 CONSTANTS

A constant is a pure number (binary, decimal, octal or hexadecimal) or an expression-string (ASCII string of 0, 1 or 2 bytes length). See the sections *Number* and *Expression String* in the chapter *Operands and Expressions* for more information about numbers and expression strings.

1.10.4 POINTERS

Pointers are memory units in which complete physical addresses of variables, labels or procedures are stored. Pointers serve to support the procedure concept and are used essentially to supply parameters to procedures. They are used in particular in conjunction with the C compiler.

The assembler instruction set does not contain instructions for which pointer can be used directly (as described below). Special instructions using this type of pointer must be created as macro instructions by the user.

1.10.4.1 DEFINING POINTERS

Pointers can be defined in assembly by means of the memory addressing directives DSPTR (Define Segment Pointer), DPPTR (Define Page Pointer), and DBPTR (Define Bit Pointer). When a pointer is defined, it can be assigned a symbolic name by which this pointer can be addressed. The three types of pointers have the structures shown in the following sections.

1.10.4.2 SEGMENT POINTERS

Segment pointers are 4 bytes (2 words) long and contain the physical address of a label or procedure, subdivided into segment number and segment offset.

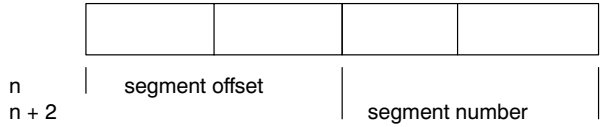

Figure 1-5: Segment pointer

1.10.4.3 PAGE POINTERS

Page pointers are 4 bytes (2 words) long and contain the physical address of a variable of type BYTE or WORD, subdivided into page number and page offset.

Figure 1-6: Page pointer

1.10.4.4 BIT POINTERS

Bit pointers are 6 bytes (3 words) long and contain the physical address of a variable of type BIT, subdivided into page number, page offset and bit offset.

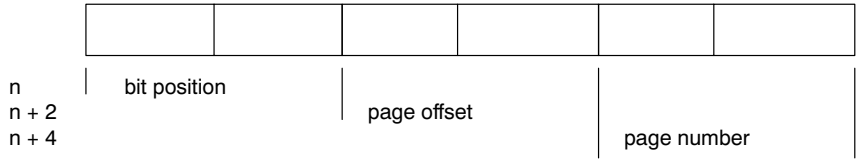

Figure 1-7: Bit pointer

1.11 SCOPES OF SYMBOLIC NAMES

The TASKING C166/ST10 toolchain concept provides Two application scopes (memory classes) for user-defined symbolic names:

- Local
- Public
- Global

1.11.1 SCOPE OF MEMORY CLASS LOCAL

A symbolic name of memory class LOCAL is know only within the module in which the name was defined. All names defined in a module automatically receive memory class LOCAL upon definition. The memory class can only altered by means of the declaration directive PUBLIC and GLOBAL. Identical 'local' names defined in different modules have no connection with each other. In the debugger, locally defined names can only be addressed in conjunction with the appropriate module name.

Symbolic names defined within a procedure are not only known within the procedure; their scope of application is the entire module.

1.11.2 SCOPE OF MEMORY CLASS PUBLIC

A symbolic name of memory class PUBLIC is known only within the task, including all modules of the task, in which this name was defined. In order to allocate memory class PUBLIC to a symbolic name, this name must be declared PUBLIC, using the PUBLIC directive, within the same module in which it was defined. A symbolic name of memory class PUBLIC implicitly has LOCAL validity as well.

The task-internal module connections EXTERN-PUBLIC are resolved by the linker. Identical PUBLIC names defined in different tasks have no connection with each other. In the debugger, public names can only be addressed in conjunction with the appropriate task name.

1.11.3 SCOPE OF MEMORY CLASS GLOBAL

A symbolic name of memory class GLOBAL is valid in every module of every task. In order to allocate memory class GLOBAL to a symbolic name, this name must be declared GLOBAL, using the GLOBAL directive, within the same module in which it was defined. A symbolic name of memory class GLOBAL implicitly has PUBLIC and LOCAL validity as well.

The intertask connections EXTERN-GLOBAL are resolved by the locate stage of **l166**. GLOBAL names must be unambiguous within the entire program. In the debugger, these names are directly addressable. To have control over resolving EXTERN connections the name of a GLOBAL symbol must not be made PUBLIC in any other module.

1.11.4 PROMOTING PUBLIC TO GLOBAL

By means of the locator control PUBTOGLB, abbreviated PTOG, the PUBLIC scope level can be promoted to the GLOBAL scope level (i.e. all PUBLIC names become GLOBAL). If this control is set all PUBLIC and GLOBAL names must be unambiguous within the entire program. The task-internal module connections now can be accessed from other modules which means that the Task concept is not strictly followed.

CONCEPT

CHAPTER 2

MACRO PREPROCESSOR

TASKING

2 CHAPTER

2.1 INTRODUCTION

The macro preprocessor, **m166**, is a string manipulation tool which allows you to write repeatedly used sections of code once and then insert that code at several places in your program. **m166** also handles conditional assembly, assembly-time loops, console I/O and recursion.

The macro preprocessor is implemented as a separate program which saves both time and space in an assembler, particularly for those programs that do not use macros. **m166** is compatible with Infineon syntax for the C166 macro processing language (MPL). A user of macros must submit his source input to the macro preprocessor. The macro preprocessor produces one output file which can then be used as an input file to the **a166** Cross-assembler.

The macro preprocessor regards its input file as a stream of characters, not as a sequence of statements like the assembler does. The macro preprocessor scans the input (source) file looking for macro calls. A macro-call is a request to the macro preprocessor to replace the call pattern of a built-in or user defined macro with its return value.

As soon as a macro call is encountered, the macro preprocessor expands the call to its return value. The return value of a macro is the text that replaces the macro call. This value is then placed in a temporary file, and the macro preprocessor continues. The return value of some macros is the null string, i.e., a character string containing no characters. So, when these macros are called, the call is replaced by the null string on the output file, and the assembler will never see any evidence of its presence. This is of course particularly useful for conditional assembly.

This chapter documents **m166** in several parts. First the invocation of **m166** and the controls you can use are described. The following sections describe how to define and use your own macros, define the syntax and describe the macro preprocessor's built-in functions. This chapter also contains a section that is devoted to the advanced concepts of **m166**.

The first five sections give enough information to begin using the macro preprocessor. However, sometimes a more exact understanding of **m166**'s operation is needed. The advanced concepts section should fill those needs.

At macro time, symbols, labels, predefined assembler symbols, EQU, and SET symbols, and the location counter are not known. The macro preprocessor does not recognize the assembly language. Similarly, at assembly time, no information about macro symbols is known.

2.2 M166 INVOCATION

The command line invocation of **m166** is:

m166 [*source-file*] [*@invocation-file*] [*control-list*] [**TO** *object-file*]
m166 –V
m166 –?
m166 –f *invocation_file*

–V displays a version header

–? shows the usage of **m166**

–f with this option you can specify an invocation file. An invocation file may contain a control list. The *control-list* can be one or more assembler controls separated by whitespace. All available controls are described in section 2.4, *M166 Controls*. A combination of invocation file and control list on the invocation line is also possible. The *source-file* and **TO** *object-file* are also allowed in the invocation file.

When you use a UNIX shell (**C–shell, Bourne shell**), options containing special characters (such as '**( )**') must be enclosed with **" "**. The invocations for UNIX and PC are the same, except for the **–?** option in the **C–shell**.

The *input-file* is an assembly source-file containing user-defined macros. If you give no file extension the defaul t **.asm** is taken.

The *control-list* is a list with controls. Controls are described in section 2.4.

The *output-file* is an assembly source file in which all user-defined macros are replaced. This file is the input file for **a166**. It has the default file extension of **.src**. **m166** also generates an optional list file with default file extension **.mpl**. The list file is only created when the PRINT control is used.

When you use EDE, you can control the macro preprocessor from the **Macro Preprocessor** entry in the **Project | Project Options** dialog.

2.3 ENVIRONMENT VARIABLES

m166 uses the following environment variables:

TMPDIR — The directory used for temporary files. If this environment variable is not set, the current directory is used.

M166INC — The directory where include files can be found. See the INCLUDE control for the use of include files.

M166INC can contain more than one directory. Separate multiple directories with '**;**' for PC ('**:**' for UNIX).

Examples:

PC:

```
set  TMPDIR=\tmp
set  M166INC=c:\c166\include
```

UNIX:

if you use the Bourne shell (sh)

```
TMPDIR=/tmp
M166INC=/usr/local/c166/include
export TMPDIR M166INC
```

if you use the C-shell (csh)

```
setenv  TMPDIR   /tmp
setenv  M166INC  /usr/local/c166/include
```

2.4 M166 CONTROLS

Like assembler controls the macro preprocessor controls can be classified as *primary* or *general*.

Primary controls can be used at the command line and at the beginning of the assembly source file.

General controls may appear anywhere in an assembly source file and also on the command line. When specified on the command line, the controls override the corresponding controls in the source file.

The controls that **m166** encounters are listed on the next pages in alphabetical order. Some controls have separate versions for turning an option on or off. These controls are described together.

2.4.1 OVERVIEW M166 CONTROLS

In the next table an overview is given of all controls that are encountered by **m166**.

Control	Abbr.	Type	Def.	Description
CASE NOCASE	CA NOCA	pri pri	 NOCA	All user names are case sensitive. User names are not case sensitive.
CHECKUNDEFINED NOCHECKUNDEFINED	CU NOCU	pri pri	 NOCU	Print a warning whenever an undefined macro is used legaly. Do not print a warning whenever an undefined macro is used legaly.
DATE('*date*')	DA	pri		system Set date in header of list file.
DEFINE(*name* [,*replacement*])	DEF	pri	1	Define a one line macro.
EJECT	EJ	gen		Generate formfeed in list file.
ERRORPRINT [(*err-file*)] NOERRORPRINT	EP NOEP	pri pri	 NOEP	Print errors to named file. No error printing.
GEN GENONLY NOGEN	GE GO NOGE	gen gen gen	GE	List macro def., calls and expansion. List only expansion of macros. List only macro definitions and calls.
INCLUDE(*inc-file*)	IC	gen		Include named file.
INCLUDEPATH('*path*')	INC	pri		Alternative path for the preprocessor.

Control	Abbr.	Type	Def.	Description
LINE[(*level*)] NOLINE	LN NOLN	pri pri	LN	Generate #LINE in output file. Do not generate #LINE in output file.
LIST NOLIST	LI NOLI	gen gen	LI	Resume listing. Stop listing.
PAGELENGTH(*length*)	PL	pri	60	Set list page length.
PAGEWIDTH(*width*)	PW	pri	120	Set list page width.
PAGING NOPAGING	PA NOPA	pri pri	PA	Format print file into pages. Do not format print file into pages.
PRINT[(*print–file*)] NOPRINT	PR NOPR	pri pri	 NOPR	Define print file name. Do not create a print file.
RESTORE SAVE	RE SA	gen gen		Restore saved listing control. Save listing control.
TABS(*number*)	TA	pri	8	Set list tab width.
TITLE ('*title*')	TT	gen	*mod–name*	Set list page header title.
WARNING(*number*)	WA	pri	1	Set warning level.
Abbr.: Abbreviation of the control. Type: Type of control: pri for primary controls, gen for general controls. Def.: Default.				

Table 2-1: ***m166*** *controls*

In the next section, the available macro preprocessor controls are listed in alphabetic order.

With controls that can be set from within EDE, you will find a mouse icon that describes the corresponding action.

2.4.2 DESCRIPTION OF M166 CONTROLS

CASE

Control:

From the **Project** menu, select **Project Options...**
Expand the **Macro Preprocessor** entry and select **Miscellaneous**.
Enable the **Operate in case sensitive mode** check box.

CASE / NOCASE

Abbreviation:

CA / NOCA

Class:

Primary

Default:

NOCASE

Description:

Selects whether the macro preprocessor operates in case sensitive mode or not. In case insensitive mode the macro preprocessor maps characters on input to uppercase. (literal strings excluded).

Example:

```
m166 x.asm case    ; m166 in case sensitive mode
```

CHECKUNDEFINED

Control:

From the **Project** menu, select **Project Options...**
Expand the **Macro Preprocessor** entry and select **Diagnostics**.
Select **Display all warnings** and enable the **Generate warning for undefined macros** check box.

CHECKUNDEFINED / NOCHECKUNDEFINED

Abbreviation:

CU / NOCU

Class:

Primary

Default:

NOCU

Description:

With the CHECKUNDEFINED control, a warning on level 2 can be generated whenever an undefined macro is used legally. Such a macro will be taken to be empty or of value 0 as usual.

Warning level 2 must be activated as well.

Example:

```
m166 undef.asm CU "WA(2)"
   ; produce warnings for undefined macro usage
```

DATE

Control:

From the **Project** menu, select **Project Options...**
Expand the **Macro Preprocessor** entry and select **List File**.
In the **List file** box, select **Default name** or **Name list file**. Enter a date in the **Date in page header** field.

DATE('*date*')

Abbreviation:

DA

Class:

Primary

Default:

system date

Description:

m166 uses the specified date-string as the date in the header of the list file. Only the first 11 characters of string are used. If less than 11 characters are present, **m166** pads them with blanks.

Examples:

```
; Nov 25 1992 in header of list file
m166 x.asm date('Nov 25 1992')

; 25-11-92 in header of list file
m166 x.asm da('25-11-92')
```

DEFINE

Control:

From the **Project** menu, select **Project Options...**
Expand the **Macro Preprocessor** entry and select **Macros**.
In the **Define macros** box, click on an empty **Macro** field and enter a macro name. Optionally, click in the **Definition** field and enter a definition.

DEFINE(*name*[,*replacement*])

Abbreviation:

DEF

Class:

Primary

Default:

-

Description:

With the DEFINE control you can define a one line macro with a control. Controls can be used on the command line, so the DEFINE control can be used to define macros on the command line. The defined macro *name* is replaced with '1' if the *replacement* is omitted, otherwise the *replacement* is used.

Example:

Contents of `opt.asm`:

```
@IF( @DOIT )
    @REPEAT( @RN )
        Repeat this text
    @ENDR
@ENDI
```

With the following invocation the macro @DOIT is assigned to 1, and the REPEAT is done three times:

```
m166 opt.asm DEF(DOIT) DEF(RN,3)
```

With the following invocation the macro @DOIT is not assigned, '0' will be substituted and the REPEAT is not done:

```
m166 opt.asm
```

EJECT

Control:

EJECT

Abbreviation:

EJ

Class:

General

Default:

New page started when page length is reached

Description:

The current page is terminated with a formfeed after the current (control) line, the page number is incremented and a new page is started. Ignored if NOPAGING, NOPRINT or NOLIST is in effect.

Example:

```
.           ; source lines
.
$eject      ; generate a formfeed
.
.           ; more source lines
$ej         ; generate a formfeed
.
.
```

ERRORPRINT

Control:

From the **Project** menu, select **Project Options...**
Expand the **Macro Preprocessor** entry and select **Miscellaneous**.
Add the control to the **Additional controls** field.

ERRORPRINT[(*file*)] / NOERRORPRINT

Abbreviation:

EP / NOEP

Class:

Primary

Default:

NOERRORPRINT

Description:

ERRORPRINT displays the error messages at the console and also redirects the error messages to an error list file. If no extension is given the default `.mpe` is used. If no filename is specified, the error list file has the same name as the input file with the extension changed to `.mpe`.

Examples:

```
m166 x.asm ep(errlist)     ; redirect errors to file
                           ; errlist.mpe
m166 x.asm ep              ; redirect errors to file
                           ; x.mpe
```

GEN / GENONLY / NOGEN

Control:

From the **Project** menu, select **Project Options...**
Expand the **Macro Preprocessor** entry and select **List File**.
In the **List file** box, select **Default name** or **Name list file**. Select an option from the **Listing of macros** box.

GEN / GENONLY / NOGEN

Abbreviation:

GE / GO / NOGE

Class:

General

Default:

GEN

Description:

With the control GEN, all macro source lines (definitions and calls) are written to the list file identical to the *source-file*. After a macro call, all assembly lines of code that are expanded by the call are written to the list file with all information (including the macro level). Nested macros are not shown.

With the control GENONLY, the expanded code only is written to the list file, but no macro definitions or calls.

With the control NOGEN, only macro definitions and calls are written to the first file, but no expanded code. Nested macro calls are not shown.

Examples:

```
; source lines
$gen
.
; all macro source lines are written to list file
.
$genonly
; only expanded code is written to list file
```

INCLUDE

Control:

From the **Project** menu, select **Project Options...**
Expand the **Macro Preprocessor** entry and select **Miscellaneous**.
Add the control to the **Additional controls** field.

INCLUDE(*include-file*)

Abbreviation:

IC

Class:

General

Default:

-

Description:

With the INCLUDE control you can include text from *include-file* within the input text of the assembly source file.

At the occurrence of an INCLUDE control, **m166** reads the text from *include-file* until end of file is reached. The directory to look for include files can be specified with the M166INC environment variable. M166INC can contain more than one directory. Separate multiple directories with '**;**' for PC ('**:**' for UNIX).

When **m166** does not find the include file in the current directory, it tries the directories of the M166INC environment variable.

Include files may also contain INCLUDE controls. *include-file* is any file that contains text.

Example:

```
; source lines
.
$include( mysrc.inc )      ; include the contents of
                           ; file mysrc.inc
.
; other source lines
```

INCLUDEPATH

Control:

From the **Project** menu, select **Project Options...**
Expand the **Macro Preprocessor** entry and select **Miscellaneous**.
Add the control to the **Additional controls** field.

INCLUDEPATH(*'path'*)

Abbreviation:

INC

Class:

Primary

Default:

-

Description:

Sets an alternative include search path for the preprocessor. You can specify multiple search directories by separating them with a semi-colon (Windows) or colon (Unix). The path(s) is read as a string and should be placed between single quotes (' ').

If a file specified using the INCLUDE control cannot be found in the current directory, it is first searched in the directories specified with this control. If the file is not found, the directories specified with the M166INC environment variable are searched. If the file is still not found, a "file not found" error is issued. Multiple specifications of this control overwrite the previous specification; the last specification takes effect.

Example:

```
m166 INCLUDEPATH('c:\program files\tasking\include;
                 c:\program files\tasking\lib\src')
```

In this example the include and library source directories are searched for included files.

LINE

Control:

From the **Project** menu, select **Project Options...**
Expand the **Macro Preprocessor** entry and select **Miscellaneous**.
Add the control to the **Additional controls** field.

LINE[(*level*)] / NOLINE

Abbreviation:

LN / NOLN

Class:

Primary

Default:

LINE(2)

Description:

The macro preprocessor generates #LINE directives for the assembler. With the LINE control you can set the the output level of "#LINE" strings in the output file.

Level 0: no "#LINE" directives are generated in the output file.

Level 1: "#LINE" directives are generated before and after an INCLUDE statement. This is for backward compatibility with earlier versions of the toolchain.

Level 2: "#LINE" directives are also generated after all build-in macros, after macro comments and after every newline within a macro. When an error is detected in the `.src` file, with LINE(2) the corresponding line number in the `.asm` file is known.

Example:

```
m166 code.asm "LN(2)" ; Generate "#LINE" directiveds
                      ; at level 2.
```

LIST

Control:

LIST / NOLIST

Abbreviation:

LI / NOLI

Class:

General

Default:

LIST

Description:

Switch the listing generation on or off. These controls take effect starting at the next line. LIST does not override the NOPRINT control.

Example:

```
$noli   ; Turn listing off. These lines are not
        ; present in the list file
.
.
$list   ; Turn listing back on. These lines are
        ; present in the list file
.
.
```

PAGELENGTH

Control:

From the **Project** menu, select **Project Options...**
Expand the **Macro Preprocessor** entry and select **List File**.
In the **List file** box, select **Default name** or **Name list file**. Enter the number of lines in the **Page length (20–255)** field.

PAGELENGTH(*lines*)

Abbreviation:

PL

Class:

Primary

Default:

PAGELENGTH(60)

Description:

Sets the maximum number of lines on one page of the listing file. This number does include the lines used by the page header (4). The valid range for the PAGELENGTH control is 20 - 255.

Example:

```
m166 x.asm pl(50)      ; set page length to 50
```

PAGEWIDTH

Control:

From the **Project** menu, select **Project Options...**
Expand the **Macro Preprocessor** entry and select **List File**.
In the **List file** box, select **Default name** or **Name list file**. Enter the number of characters in the **Page width (60–255)** field.

PAGEWIDTH(*characters*)

Abbreviation:

PW

Class:

Primary

Default:

PAGEWIDTH(120)

Description:

Sets the maximum number of characters on one line in the listing. Lines exceeding this width are wrapped around on the next lines in the listing. The valid range for the PAGEWIDTH control is 60 - 255. Although greater values for this control are not rejected by the macro preprocessor, lines are truncated if they exceed the length of 255.

Example:

```
m166 x.asm pw(130)

; set page width to 130 characters
```

PAGING

Control:

From the **Project** menu, select **Project Options...**
Expand the **Macro Preprocessor** entry and select **List File**.
In the **List file** box, select **Default name** or **Name list file**. Enable the **Format list file into pages** check box.

PAGING / NOPAGING

Abbreviation:

PA / NOPA

Class:

Primary

Default:

PAGING

Description:

Turn the generation of formfeeds and page headers in the listing file on or off. If paging is turned off, the EJECT control is ignored.

Example:

```
m166 x.asm nopa

; turn paging off: no formfeeds and page headers
```

PRINT

Control:

From the **Project** menu, select **Project Options...**
Expand the **Macro Preprocessor** entry and select **List File**.
In the **List file** box, select **Default name** or select **Name list file** and enter a name for the list file. If you do not want a list file, select **Skip list file**.

PRINT[(*file*)] / NOPRINT

Abbreviation:

PR / NOPR

Class:

Primary

Default:

NOPRINT

Description:

The PRINT control specifies an alternative name for the listing file. If no extension for the filename is given, the default extension `.mpl` is used. If no filename is specified, the list file has the same name as the input file with the extension changed to `.mpl`. The NOPRINT control causes no listing file to be generated.

Examples:

```
m166 x.asm                ; no list file generated
m166 x.asm pr             ; list filename is x.mpl
m166 x.asm pr(mylist)     ; list filename is mylist.mpl
```

SAVE/RESTORE

Control:

SAVE / RESTORE

Abbreviation:

SA / RE

Class:

General

Default:

-

Description:

SAVE stores the current value of the LIST / NOLIST controls onto a stack. RESTORE restores the most recently SAVEd value; it takes effect starting at the next line. SAVEs can be nested to a depth of 16.

Example:

```
$nolist
; source lines
$save             ; save values of LIST / NOLIST

$list

$restore          ; restore value (nolist)
```

TABS

Control:

From the **Project** menu, select **Project Options...**
Expand the **Macro Preprocessor** entry and select **List File**.
In the **List file** box, select **Default name** or **Name list file**. Enter the number of blanks for a tab in the **Tab width (1–12)** field.

TABS(*number*)

Abbreviation:

TA

Class:

Primary

Default:

TABS(8)

Description:

TABS specifies the number of blanks that must be inserted for a tab character in the list file. TABS can be any decimal value in the range 1 - 12.

Example:

```
m166 x.asm ta(4)    ; use 4 blanks for a tab
```

TITLE

Control:

From the **Project** menu, select **Project Options...**
Expand the **Macro Preprocessor** entry and select **List File**.
In the **List file** box, select **Default name** or **Name list file**. Enter a title in the **Title in page header** field.

TITLE(*'title'*)

Abbreviation:

TT

Class:

General

Default:

TITLE(*module-name*)

Description:

Sets the title which is to be used at the second line in the page headings of the list file. To ensure that the title is printed in the header of the first page, the control has to be specified in the first source line. The title string is truncated to 60 characters. If the page width is too small for the title to fit in the header, it is be truncated even further.

Example:

```
$title('NEWTITLE')

; title in page header is NEWTITLE
```

WARNING

Control:

From the **Project** menu, select **Project Options...**
Expand the **Macro Preprocessor** entry and select **Diagnostics**.
Select **Suppress all warnings**, **Display important warnings** or **Display all warnings**.

WARNING(*number*)

Abbreviation:

WA

Class:

Primary

Default:

WARNING(1)

Description:

This control sets the warning level to the supplied *number*. The macro preprocessor knows 3 warning levels:

0 display no warnings
1 display important warnings only (default)
2 display all warnings

Example:

```
m166 x.asm wa(2)     ; display all warnings
```

2.5 CREATING AND CALLING MACROS

Macro calls differ between user-defined macros and so-called built-in functions (an overview of all built-in functions and the entire macro syntax is contained in section 2.6.10, *Overview Macro Built-in Functions*). All characters in **bold** typeface in the syntax descriptions of the following sections are constituents of the macro syntax. *Italic* tokens represent place holders for user-specific declarations.

Since **m166** only processes macro calls, it is necessary to call a macro in order to create other macros. The built-in function DEFINE creates macros. Built-in functions are a predefined part of the macro language, so they may be called without prior definition.

***Syntax**:*

@[*]**DEFINE** *macro-name* [**(***parameter-list***)**] [**@LOCAL(***local-list***)**]
macro-body
@ENDD

DEFINE is the most important **m166** built-in function. This section of the chapter is devoted to describing this built-in function. Each of the symbols in the syntax above (*macro-name*, *parameter-list*, *local-list* and *macro-body*) are described in detail on the pages that follow. In some cases, we have abbreviated this general syntax to emphasize certain concepts.

2.5.1 CREATING PARAMETERLESS MACROS

When you create a parameterless macro, there are two parts to a DEFINE call: the *macro-name* and the *macro-body*. The *macro-name* defines the name used when the macro is called; the *macro-body* defines the return value of the call.

***Syntax**:*

@[*]**DEFINE** *macro-name* [**()**]
macro-body
@ENDD

The '@' character signals a macro call. The exact use of the literal character '*' is discussed in the advanced concept section. When you define a parameterless macro, the macro-name is a macro identifier that follows the '@' character in the source line. The rules for macro identifier are:

- The identifier must begin with an upper or lower-case alphabetic character (A,B,...,Z or a,b,...,z), or the underscore character (_).
- The remaining characters may be alphabetic, the underscore character (_), or decimal digits (0,1,2,...,9).
- A macro identifier can be a maximum of 32 characters in length. A macro label can consist of 28 characters. Upper-case and lower-case identifiers are differentiated, as long as the $CASE control is active.

The *macro-body* is usually the return value of the macro call and is enclosed by the @DEFINE statement and @ENDD statement. However, the macro-body may contain calls to other macros. If so, the return value is actually the fully expanded macro-body, including the return values of the call to other macros. When you define a macro using the literal character '*', as shown above, macro calls contained in the body of the macro are not expanded until the macro is called. The macro call is re-expanded each time it is called.

***Example 1**:*

```
@DEFINE String_1   An @ENDD

@DEFINE String_2   ele
@ENDD

@DEFINE String_3
phant @ENDD

@DEFINE String_4 ()
     shopping
@ENDD

@DEFINE String_5
 goes
@String_4
@ENDD

@DEFINE Part_1
     @String_1 @String_2()@String_3
@ENDD
```

The specification of the brackets () when calling a parameterless macro is optional. This is regardless of wether brackets () were specified for the definition or not.

Example**:**

```
           Definition              Call
String_3:  @DEFINE String_3        @String_3 or @String_3()
String_4:  @DEFINE String_4()      @String_4 or @String_4()
```

As previously mentioned, the macro-body is surrounded by the @DEFINE statement and the @ENDD statement. The possible placement of the *macro-body* and the @ENDD statement are both represented in the above examples.

The beginning of the *macro-body* is determined by the syntactical end of @DEFINE statement, where tabs (08H), blanks and the first new line (0AH) are not counted as a part of the *macro-body*.

The *macro-body* of String_1 starts with the 'A' of "An"
The *macro-body* of String_3 starts with the 'p' of "phant"
The *macro-body* of String_4 starts with the '(08H)' of "(08H)shopping".

The end of *macro-body* is displayed by the @ENDD statement, where the new line (0AH) preceding @ENDD is not counted as part of the *macro-body*.

The *macro-body* of String_4 is "(08H)shopping"
The *macro-body* of String_5 is " goes (0AH)
(08H)shopping"

To call a macro, you use the '@' character followed by the name of the macro (the literal character '*' is only admissible for defined macros whose call is passed to a macro as a an actual parameter; example: @M1(@*M2)). The macro preprocessor removes the call and inserts the return value of the call. If the *macro-body* contains any call to other macros, they are replaced with their return values.

Example 2:

```
@Part_1 @String_5          -->  An elephant goes
                                shopping.
```

Once a macro has been created, it may be redefined by a second call to DEFINE (see *Advanced **m166** Concepts*). The examples below show several macro definitions. Their return values are also shown.

The macros shown have the disadvantage of using fixed label names. Calling them twice produces a syntax error at assembly time. This problem can be solved using the LOCAL facility, which is described later.

Example 3:

Macro definition at the top of the program:

```
@DEFINE MOVE ()
     MOV  R1, #TAB1
     MOV  R2, #TAB2
LAB1:
     MOV  R4, R1
     SUB  R1, #1
     ADD  R4, R0
     MOV  R5, R2
     SUB  R2, #1
     ADD  R5, R0
     MOV  R7, [R4]
     MOV  [R5], R7
     MOV  R7, R1
     SUB  R7, #TAB1 - 100T
     CMP  R7, #0
     JMP  LAB1
@ENDD
```

The macro call as it appears in the program:

```
     MOV  R0, #TABSEG
----@MOVE
```

The program as it appears after the macro preprocessor made the following expansion, where the first expanded line is preceded by the four blanks preceding the call (the sign - indicates the preceding blanks):

```
----     MOV   R1, #TAB1
     MOV  R2, #TAB2
LAB1:
     MOV  R4, R1
     SUB  R1, #1
     ADD  R4, R0
     MOV  R5, R2
     SUB  R2, #1
     ADD  R5, R0
     MOV  R7, [R4]
     MOV  [R5], R7
     MOV  R7, R1
     SUB  R7, #TAB1 - 100T
     CMP  R7, #0
     JMP  LAB1
```

Example 4:

Macro definition at the top of the program:

```
@DEFINE ADD5
     MOV  R1, #TAB2
LAB2:
     MOV  R4, R1
     SUB  R1, #1
     ADD  R4, R0
     MOV  R7, #5T
     ADD  R7, [R4]
     MOV  [R4], R7
     MOV  R7, R1
     SUB  R7, #TAB2 - 100T
     CMP  R7, #0
     JMP  LAB2
@ENDD
```

The macro call as it appears in the original program body:

```
     MOV  R0, #TABSEG
@ADD5
```

The program after the macro expansion:

```
     MOV  R0, #TABSEG
     MOV  R1, #TAB2
LAB2:
     MOV  R4, R1
     SUB  R1, #1
     ADD  R4, R0
     MOV  R7, #5T
     ADD  R7, [R4]
     MOV  [R4], R7
     MOV  R7, R1
     SUB  R7, #TAB2 - 100T
     CMP  R7, #0
     JMP  LAB2
```

Example 5:

Macro definition at the top of the program:

```
@*DEFINE MOVE_AND_ADD()
@MOVE
@ADD5
@ENDD
```

The macro call as it appears in the body of the program:

```
     MOV  R0, #TABSEG
@MOVE_AND_ADD
```

The body after the macro expansion:

```
     MOV  R1, #TAB1
     MOV  R2, #TAB2
LAB1:
     MOV  R4, R1
     SUB  R1, #1
     ADD  R4, R0
     MOV  R5, R2
     SUB  R2, #1
     ADD  R5, R0
     MOV  R7, [R4]
     MOV  [R5], R7
     MOV  R7, R1
     SUB  R7, #TAB1 - 100T
     CMP  R7, #0
     JMP  LAB1
     MOV  R1, #TAB2
LAB2:
     MOV  R4, R1
     SUB  R1, #1
     ADD  R4, R0
     MOV  R7, #5T
     ADD  R7, [R4]
     MOV  [R4], R7
     MOV  R7, R1
     SUB  R7, #TAB2 - 100T
     CMP  R7, #0
     JMP  LAB2
```

2.5.2 CREATING MACROS WITH PARAMETERS

If the only function of the macro preprocessor was to perform simple string replacement, then it would not be very useful for most of the programming tasks. Each time we wanted to change even the simplest part of the macro's return value we would have to redefine the macro.

Parameters in macro calls allow more general-purpose macros. Parameters leave holes in a macro-body that are filled in when you call the macro. This permits you to design a single macro that produces code for typical programming operations. The term 'parameters' refers to both the formal parameters that are specified when the macro is defined (the holes, and the actual parameters or argument that are specified when the macro is called (the fill-ins). The syntax for defining macros with parameters is very similar to the syntax for macros without parameters.

Syntax:

@[*]**DEFINE** *macro-name* [**(***parameter-list***)**]
    macro-body
@ENDD

The *macro-name* must be a valid identifier. The *parameter-list* is a list of macro identifiers separated by ','. These identifiers comprise the formal parameters used in the macro. The macro identifier for each parameter in the list must be unique. The locations of parameter replacement (the placeholders to be filled in by the actual parameters) are indicated by placing a parameter's name preceded by the '@' character in the macro-body (if a user-defined macro has the same macro identifier name as one of the parameters to the macros, the macro may not be called within the *macro-body* since the name would be recognized as a parameter).

The example below shows the definition of a macro with three parameters: `SOURCE`, `DEST` and `COUNT`. The macro produces code to copy any number of words from one part of memory to another.

Example:

```
@DEFINE MOVE_ADD_GEN ( SOURCE, DEST, COUNT )
     MOV  R1, #@SOURCE
     MOV  R2, #@DEST
LAB1:
     MOV  R4, R1
     SUB  R1, #1
     ADD  R4, R0
     MOV  R5, R2
     SUB  R2, #1
     ADD  R5, R0
     MOV  R7, [R4]
     MOV  [R5], R7
     MOV  R7, R1
     SUB  R7, #@SOURCE - @COUNT
     CMP  R7, #0
     JMP  CC_EQ, LAB1
@ENDD
```

To call a macro with parameters, you must use the '@' character followed by the macro's name as with parameterless macros. However, a list of the actual parameters must follow. These actual parameters have to be enclosed within parentheses and separated from each other by commas. The actual parameters may optionally contain calls to other macros.

A simple call to a macro defined above might be:

```
@MOVE_ADD_GEN( TAB1, TAB2, 100T )
```

The above macro call produces the following code:

```
     MOV  R1, #TAB1
     MOV  R2, #TAB2
LAB1:
     MOV  R4, R1
     SUB  R1, #1
     ADD  R4, R0
     MOV  R5, R2
     SUB  R2, #1
     ADD  R5, R0
     MOV  R7, [R4]
     MOV  [R5], R7
     MOV  R7, R1
     SUB  R7, #TAB1 - 064h
     CMP  R7, #0
     JMP  CC_EQ, LAB1
```

2.5.3 LOCAL SYMBOLS IN MACROS

As mentioned in the note to Example 3, a macro using a fixed label can only be called once, since a second call to the macro causes a conflict in the label definitions at assembly time. The label can be made a parameter and a different symbol name can be specified each time the macro is called.

A preferable way to ensure a unique label for each macro call is to put the label in a *local-list*. The *local-list* construct allows you to use macro identifiers to specify assembly-time symbols. Each use of a LOCAL symbol in a macro guarantees that the symbol will be replaced by a unique assembly-time symbol each time the symbol is called.

The macro preprocessor increments a counter once for each symbol used in the list every time your program calls a macro that uses the LOCAL construct. Symbols in the *local-list*, when used in the *macro-body*, receive a three digit suffix that is the decimal value of the counter preceded by '_'. The first time you call a macro that uses the LOCAL construct the suffix is '_001'.

The syntax for the LOCAL construct in the DEFINE function is shown below. (This is the complete syntax for the built-in function DEFINE):

Syntax:

@[*]**DEFINE** *macro-name* [**(***parameter-list***)**] [**@LOCAL(***local-list***)**]
macro-body
@ENDD

The *local-list* is a list of valid macro identifiers separated by commas. Since these macro identifiers are not parameters, the LOCAL construct in a macro has no effect on a macro call.

Example:

```
@DEFINE MOVE_ADD_GEN( SOURCE, DEST, COUNT) @LOCAL(LABEL)
     MOV  R1, #@SOURCE
     MOV  R2, #@DEST
@LABEL:
     MOV  R4, R1
     SUB  R1, #1
     ADD  R4, R0
     MOV  R5, R2
     SUB  R2, #1
     ADD  R5, R0
     MOV  R7, [R4]
     MOV  [R5], R7
     MOV  R7, R1
     SUB  R7, #@SOURCE - @COUNT
     CMP  R7, #0
     JMP  CC_EQ, @LABEL
@ENDD
```

The following macro call:

```
@MOVE_ADD_GEN( TAB1, TAB2, 100T)
```

produces the following code if this is the eleventh call to a macro using LABEL in its local-list:

```
     MOV  R1, #TAB1
     MOV  R2, #TAB2
LABEL_011:
     MOV  R4, R1
     SUB  R1, #1
     ADD  R4, R5
     MOV  R5, R2
     SUB  R2, #1
     ADD  R5, R0
     MOV  R7, [R4]
     MOV  [R5], R7
     MOV  R7, R1
     SUB  R7, #TAB - 064h
     CMP  R7, #0
     JMP  CC_EQ, LABEL_011
```

Since macro identifiers follow the same rules as A166, any macro identifier can be used in a *local-list*.

2.6 THE MACRO PREPROCESSOR'S BUILT-IN FUNCTIONS

The macro preprocessor has several built-in or predefined macro functions. These built-in functions perform many useful operations that are difficult or impossible to produce in a user-defined macro.

We have already discussed one of these built-in functions, DEFINE. DEFINE creates user-defined macros. DEFINE does this by adding an entry in the macro preprocessor's tables of macro definitions. Each entry in the tables includes the macro-name of the macro, its parameter-list, its local-list and its macro-body. Entries for the built-in functions are present when the macro preprocessor begins operation.

Other built-in functions perform numerical and logical expression evaluation, affect control flow of the macro preprocessor, manipulate character strings, and perform console I/O.

The following sections deal with the following:

Expressions processed by **m166**

Calculating functions	(SET, EVAL)
Controlling functions	(IF, WHILE, REPEAT, BREAK, EXIT, ABORT)
String-processing functions	(LEN, SUBSTR, MATCH)
String-comparing functions	(EQS, NES, LTS, LES, GTS, GES)
Identifier check function	(DEFINED)
Input/Output functions	(IN, OUT)
Macro comments	("...", "...)

2.6.1 NUMBERS AND EXPRESSIONS IN M166

Many built-in functions recognize and evaluate numerical expressions in their arguments. **m166** uses the following rules for representing numbers:

- Numbers may be represented in the formats binary (B suffix), octal (O suffix), decimal (D, T or no suffix), and hexadecimal (H suffix).
- Internal representation of numbers is 32-bits (00H to 0FFFFFFFFH) ; the processor does not recognize or output real or long integer numbers.
- The following operators are recognized by the macro preprocessor (in descending precedence):

  Binary operators (left-associated) and Unary operators (right-associated):

  1. '(' ')'
  2. HIGH LOW '+' '-' '~'
  3. '*' '/' MOD '%' SHL '<<' SHR '>>'
  4. '+' '-'
  5. LT '<' LE '<=' GT '>' GE '>=' ULT ULE UGT UGE EQ '==' NE '!='
  6. NOT '!'
  7. AND '&' '&&'
  8. XOR '^' OR '|' '||'

  Unary operators (right-associated):

  HIGH LOW NOT '!' '~' '+' '-'

HIGH removes the lower 8 bits, using an arithmetic shift right. Similarly, **LOW** removes all but the lower 8 bits.

An overview of the expressions can be found in the macro syntax in section 2.6.10, *Overview Macro Built-in Functions*.

The macro preprocessor cannot access the assembler's symbol table. The values of labels, location counter, EQU and SET symbols are not known during macro time expression evaluation. Any attempt to use assembly time symbols in a macro time expression generates an error. Macro time symbols can be defined, however, with the predefined macro, SET.

2.6.2 SET FUNCTION

SET assigns the value of the numeric *expression* to the identifier, *macro-variable*, and stores the *macro-variable* in the macro time symbol table, *macro-variable* must follow the same syntax convention used for other macro identifiers. Expansion of a *macro-variable* always results in hexadecimal format.

Syntax:

@SET(*macro-variable*, *expression* **)**

The SET macro call affects the macro time symbol table only; when SET is encountered, the macro preprocessor replaces it with the null string. Symbols defined by SET can be redefined by a second SET call, or defined as a macro by a DEFINE call (in this case a warning is sent - see *Advanced* ***m166*** *Concepts*).

Example:

```
@SET( COUNT, 0)-> null string
@SET( OFFSET, 16)   -> null string
MOV   R1, #@COUNT + @OFFSET   -> MOV R1,#00h + 010h
MOV   R2, #@COUNT   -> MOV R2,#00h
```

SET can also be used to redefine symbols in the macro time table:

```
@SET( COUNT, @COUNT + @OFFSET )    -> null string
@SET( OFFSET, @OFFSET * 2)    -> null string
MOV  R1, #@COUNT + @OFFSET    -> MOV R1,#010h + 020h
MOV  R2, #@COUNT    -> MOV R2,#010h
```

2.6.3 EVAL FUNCTION

The built-in function EVAL accepts an expression as its argument and returns the *expression*'s value in hexadecimal.

Syntax:

@EVAL(*expression* **)**

The *expression* argument must be a legal macro time expression. The return value from EVAL is built according to **a166**'s rules for representing hexadecimal numbers. The trailing character is always the hexadecimal suffix (**h**).

Example:

```
COUNT SET @EVAL(33H + 15H + 0f00H)  -> COUNT SET 0F48h

MOV  R1, #@EVAL(10H - ((13+6) *2 ) +7)    -> MOV  R1, #0FFFFFFF1h

@SET( NUM1, 44)   -> null string
@SET( NUM2, 25)   -> null string

MOV   R1, #@EVAL( @NUM1 <= @NUM2 )  -> MOV  R1, #00h
```

2.6.4 CONTROL FLOW AND CONDITIONAL ASSEMBLY

Some built-in functions expect logical *expressions* in their arguments. Logical *expressions* follow the same rules as numeric *expressions*. The difference is in how the macro interprets the 32-bit value that the *expression* represents. Once the *expression* has been evaluated to a 32-bit value, **m166** uses the '<=0' comparison to determine whether the expression is TRUE or FALSE (if the value is less than or equal to 0 the expression is FALSE else it is TRUE).

Typically, the relational operators (EQ, '==', NE, '!=', LE, '<=', LT, '<', GE, '>=', or GT, '>') or the string comparison functions (EQS, NES, LES LTS, GES, or GTS) are used to specify a logical value. Since these operators and functions always evaluate to 01h or 00h, internal determination is not necessary.

Similar to the definition of a macro (where the macro *statement* is enclosed by the @DEFINE *statement* and the @ENDD *statement*), the body of the control structures @IF, @WHILE and @REPEAT are constructed the same way. The control body (*statements*) of the macro are enclosed by the control *statement* and the respective control structures that end with @END*x* (*x* = I for ENDI, W for ENDW and R for ENDR). Like for @ENDD, the last new line before the respective control end *statement* is not counted as part of the *macro-body* (see section 2.5.1).

2.6.4.1 IF FUNCTION

The IF built-in function evaluates a logical *expression*, and based on that *expression*, expands or withholds its *statements*.

Syntax:

@IF(*expression* **)**
*statement*s
[**@ELSE**
*statement*s]
@ENDI

The IF function first evaluates the *expression*. If it's TRUE, then the succeeding *statements* are expanded; if it's FALSE and the optional ELSE clause is included in the call, then the *statements* succeeding @ELSE are expanded. If the *expression* results to FALSE and the ELSE clause is not included, the IF call returns the null string. The *control-body* is to be terminated by @ENDI.

IF calls can be nested. The ELSE clause refers to the most recent IF call that is still open (not terminated by @ENDI). @ENDI terminates the most recent IF call that is still open. The level of macro nesting is limited to 300.

When using an undefined macro in an *expression* in the @IF function, the preprocessor will not complain about an undefined macro, but expands the macro to '0'. This is useful for testing on default situations.

Example:

This is a simple example of the IF call with no ELSE clause:

```
@SET( VALUE, 0F0H )
@IF( @VALUE >= 0FFH )
     MOV  R1, #@VALUE
@ENDI
```

Example:

This is the simplest form of the IF call with an ELSE clause:

```
@MATCH( OPERATION, OP2, "ADD R2" )
@IF( @EQS( "ADD R2", @OPERATION ))
     ADD  R7, #00FFH
@ELSE@OPERATION, #00FFH
@ENDI
```

Example:

This is an example of several nested IF calls:

```
@IF( @EQS( @OPER, "ADD" ))
     ADD  R1, #DATUM
@ELSE @IF( @EQS( @OPER, "SUB" ))
     SUB  R1, #DATUM
     @ELSE@IF( @EQS( @OPER, "MUL" ))
          MOV  R1, #DATUM
          JMP  MUL_LAB
          @ELSE
          MOV  R1, #DATUM
          JMP  DIV_LAB
          @ENDI
     @ENDI
@ENDI
```

Example:

This an example of testing on undefined macros. The macro @INCL_FILE is not defined:

```
@IF( @INCL_FILE )
     $INCLUDE( incfil.h )
@ENDI
```

Now the file **incfil.h** is only included when @INCL_FILE is set to 1.

Example:

Demonstrating conditional assembly:

```
@SET( DEBUG, 1 )
@IF( @DEBUG )
     MOV  R1, #DBFLAG
     JMP  DEBUG
@ENDI

     MOV  R1, R2
      .
      .
      .
```

This expands to:

```
MOV  R1, #DBFLAG
JMP  DEBUG
MOV  R1, R2
```

@SET can be changed to:

```
@SET( DEBUG, 0 )
```

to turn off the debug code.

2.6.4.2 WHILE FUNCTION

The IF macro is useful for implementing one kind of conditional assembly including or excluding lines of code in the source file. However, in many cases this is not enough. Often you may wish to perform macro operations until a certain condition is met. The built-in function WHILE provides this facility.

Syntax:

@WHILE(*expression* **)**
*statement*s
@ENDW

The WHILE function evaluates the *expression*. If it results to TRUE, the *statements* are expanded; otherwise not. Once the *statements* have been expanded, the logical arguments is retested and it's still TRUE, the *statements* are expanded again. This continues until the logical argument proves FALSE.

Since the macro continues processing until the *expression* is FALSE, the *statements* should modify the *expression*, or else WHILE may never terminate.

A call to built-in function BREAK or EXIT always terminates a WHILE macro. BREAK and EXIT are described below.

The following example shows the common use of the WHILE macro:

Example:

```
@SET( COUNTER, 7 )

@WHILE( @COUNTER >= 0 )
     MOV  R2, #@COUNTER
     MOV  [R1], R2
     ADD  R1, #2
     @SET( COUNTER, @COUNTER - 1 )
@ENDW
```

This example uses the SET macro and a macro time symbol to count the iterations of the WHILE macro.

2.6.4.3 REPEAT FUNCTION

m166 offers another built-in function that performs the counting loop automatically. The built-in function REPEAT expands its *statements* a specified number of times.

Syntax:

@REPEAT(*expression* **)**
statements
@ENDR

Unlike the IF and WHILE macros, REPEAT uses the *expression* for a numerical value that specifies the number of times the *statements* should be expanded. The *expression* is evaluated once when the macro is first called, then the specified number of iterations is performed.

A call to built-in function BREAK or EXIT always terminates a WHILE macro. BREAK and EXIT are described in the next sections.

Example:

```
Lab:
     MOV R1, #TAB8
     MOV R2, #0FFFFH

     @REPEAT( 8 )
       MOV[R1], R2
       ADDR1, #2
     @ENDR
```

2.6.4.4 BREAK FUNCTION

The built-in BREAK function terminates processing of the WHILE or the REPEAT loop in the body where they are called. If BREAK is used outside of a loop, a BREAK is treated like EXIT. BREAK allows a loop to be exited at various points.

Syntax:

@BREAK

Example:

```
@SET( CNT, 8 )
@WHILE( @CNT )
     @M2( @CNT )              @" sets @CNT2"

     @REPEAT( @CNT2 )
        @M1( @CNT )       @" sets @CNT3"
        @IF( @CNT3 <= 0 )
        @BREAK
     @ENDR

     @SET( CNT, @CNT - 1 )
@ENDW
```

This use of BREAK terminates the current REPEAT action and continues with the @SET *statement* succeeding the REPEAT structure.

2.6.4.5 EXIT FUNCTION

The built-in function EXIT terminates expansion of the most recently called user defined macro. It is most commonly used to avoid infinite loops (e.g. a recursive user defined macro that never terminates). It allows several exit points in the same macro.

Syntax:

@EXIT

Example:

This use of EXIT terminates a recursive macro when an odd number of bytes has been added.

```
@*DEFINE AS(STR1,STR2) @STR1@STR2@ENDD

@*DEFINE MEM_ADD_MEM( SOURCE, DEST, BYTES )
      @IF( @BYTES <= 0 )
         @EXIT
      ADD   R0, #@SOURCE
      MOV   RL2, [R0]
      ADD   R1, #@DEST
      ADD   RL2, [R1]
      MOV   [R1], R2
      @IF( @BYTES == 1 )
         @EXIT
      @ENDI
      ADD   R0, #1
      MOV   RL2, [R0]
      ADD   R1, #1
      ADD   RL2, [R1]
      MOV   [R1], R2

@MEM_ADD_MEM(@AS(@SOURCE,"+2"),@AS(@DEST,"+2"),@AS(@BYTES,"-2"))
      @ENDI
@ENDD
```

The above example adds two pairs of bytes and stores results in DEST. As long as there is a pair of bytes to be added, the macro MEM_ADD_MEM is expanded. When BYTES reaches a value of 1 or 0, the macro is exited.

Example:

This EXIT is a simple jump out of a recursive loop:

```
@*DEFINE BODY
      MOV R1,@MVAR
      @SET( MVAR, @MVAR + 1 )
@ENDD

@*DEFINE UNTIL( CONDITION, EXE_BODY )
      @EXE_BODY
      @IF( @CONDITION )
         @EXIT
      @ELSE
         @UNTIL( @CONDITION, @EXE_BODY )
      @ENDI
@ENDD

@SET( MVAR, 0 )
@UNTIL( "@MVAR > 3", @*BODY )
```

The purpose of the macro preprocessor is to manipulate character strings. Therefore, there are several built-in functions that perform common character string manipulation functions. They are described in the following sections.

2.6.4.6 ABORT FUNCTION

The built-in ABORT function terminates the preprocessing session. It can be used to abort preprocessing when an error has been detected or when preprocessing should be halted at a certain point.

When the ABORT function is called, a message will be output and the program will exit with the supplied exit status.

Syntax:

@ABORT(*exit-status***)**

Example:

The following use of ABORT illustrates the way the macro preprocessor parses macro definitions.

```
@DEFINE TEST
First
@ABORT(0)
Second
@ENDD

Third
@TEST
FOURTH
```

This will result in the following output:

```
First
```

When parsing the TEST macro definition, the ABORT function is executed immediately. This works in the same way as the @OUT and @IN functions. The correct way of using @ABORT inside macro definitions is to use literal mode:

```
@*DEFINE TEST
First
@ABORT(0)
Second
@ENDD

Third
@TEST
Fourth
```

This will result in the following output:

```
Third
First
```

2.6.5 STRING MANIPULATION FUNCTIONS

The macro language contains three functions that perform common string manipulation functions, namely, the LEN, SUBSTR and MATCH function.

2.6.5.1 LEN FUNCTION

The built-in function LEN takes a character *string* argument and returns the length of the character *string* in hexadecimal format (the same format as EVAL).

Syntax:

@LEN(*string* **)**

string is a place holder for:

1. an explicitly specified string enclosed in quotes ("..."),
2. an identifier which characterizes a *macro-string* (defined by MATCH)
3. the call of a built-in function that returns a string.

The definition of this parameter type applies for all of the following functions that use "*string*".

Example:

Several examples of calls to LEN and the hexadecimal numbers returned are shown below:

Before Macro Expansion	**After Macro Expansion**
`@LEN("ABNCDEFGHIJKLMOPQRSTUVWXYZ")`	`-> 01Bh`
`@LEN( "A,B,C" )`	`-> 05h`
`@LEN( "" )`	`-> 00h`
`@MATCH( STR1, STR2, "Cheese, Mouse" )`	
`@LEN( @STR1 )`	`-> 06h`
`@LEN( @SUBSTR( @STR2, 1, 3 ))`	`-> 03h`

2.6.5.2 SUBSTR FUNCTION

The built-in function SUBSTR returns a sub*string* of its *text* argument. The macro takes three arguments: a *string* from which the sub*string* is to be extracted and two numeric arguments.

Syntax:

@SUBSTR(*string*, *expression*, *expression* **)**

string as described earlier (see LEN)

The first *expression* specifies the starting character of the substring.

The second *expression* specifies the number of characters to be included in the sub*string*.

If the first *expression* is greater than the length of the argument *string*, SUBSTR returns the null *string*. If the *expression*'s value is 0 or 1, the first character of the *string* is specified as starting character.

If the second *expression* is zero, then SUBSTR returns the null *string*. If it is greater than the remaining length of the *string*, then all characters from the start character of the sub*string* to the end of the *string* are included.

Example:

The examples below several calls to SUBSTR and the value returned:

Before Macro Expansion	**After Macro Expansion**
`@SUBSTR( "ABCDEFG", 5, 1 )`	`-> "E"`
`@SUBSTR( "ABCDEFG", 5, 100 )`	`-> "EFG"`
`@SUBSTR( "123(56)890", 4, 4 )`	`-> "(56)"`
`@SUBSTR( "ABCDEFG", 8, 1 )`	`-> null`
`@SUBSTR( "ABCDEFG", 3, 0 )`	`-> null`

2.6.5.3 MATCH FUNCTION

The MATCH function primarily serves to define a *macro-string* (*text* variable for the simple *text* replacement). A *macro-string* is a place holder for the *string* defined and assigned by the MATCH function.

A string can be:

1. a text-string enclosed by quotation marks
2. a name of a previously defined macro-string
3. the call of a built-in function that returns a string.

Syntax:

@MATCH(*macro-string*,[*macro-string*,] *string* **)**

macro-string is a valid **m166** identifier.

string as described earlier (see LEN).

At the time when a *macro-string* is defined, the assigned *string* is not tested. Testing of the *string* contents occurs when the *macro-string* is expanded.

Example:

```
@MATCH( MS1, "ABC" )-> ABC
@MATCH( MS2, @MS1 ) -> ABC
@MATCH( MS3, @LEN( @MS1 ))     -> 03h
```

The alternative use of MATCH is for processing *string* lists. This application is selected when two *macro-string*s are specified for the definition.

Example:

```
@MATCH (N1, N2, "10, 20, 30" )
```

In this case, MATCH searches a character *string* for a comma and assigns the substrings on either side of the comma for the *macro-strings*.

MATCH searches the *string* for the first comma. When it is found, all characters to the left of it are assigned to the first *macro-string* and all characters to the right are assigned to the second *macro-string*. If the comma is not found, the entire *string* is assigned to the first *macro-string* and the null string is assigned to the second one.

Example:

```
@MATCH( NEXT, LIST, "10H, 20H, 30H" )
     ADD  R0, #TAB
@WHILE( @LEN( @NEXT ))
     MOV  R1, [R0]
     ADD  R1, #@NEXT
     MOV  [R0], R1
     ADD  R0, #2
@MATCH( NEXT, LIST, @LIST )
@ENDW
```

Produces the following code:

```
     ADD  R0, #TAB
```

First iteration of WHILE:

```
     MOV  R1, [R0]
     ADD  R1, #10H
     MOV  [R0], R1
     ADD  R0, #2
```

Second iteration of WHILE:

```
     MOV  R1, [R0]
     ADD  R1, #20H
     MOV  [R0], R1
     ADD  R0, #2
```

Third iteration of WHILE:

```
MOV  R1, [R0]
ADD  R1, #30H
MOV  [R0], R1
ADD  R0, #2
```

2.6.6 LOGICAL EXPRESSIONS AND STRING COMPARISON IN M166

Several built-in functions return a logical value when they are called. Like relational operators that compare numbers and return TRUE or FALSE ('01H' or '00H') respectively, these built-in functions compare character strings. If the function evaluates to 'TRUE', then it returns the character string '01H'. If the function evaluates to 'FALSE', then it returns '00H'.

The built-in functions that return a logical value compare two *string* arguments and return a logical value based on that comparison. The list of string comparison functions below shows the syntax and describes the type of comparison made for each.

@EQS(*string*, *string* **)**	TRUE if both *string*s are identical; equal
@NES(*string*, *string* **)**	TRUE if *string*s are different in any way; not equal
@LTS(*string*, *string* **)**	TRUE if first *string* has a lower value than second *string*;less than
@LES(*string*, *string* **)**	TRUE if first *string* has a lower value than second *string* or if both *string*s are identical; less than or equal
@GTS(*string*, *string* **)**	TRUE if first *string* has a higher value than second *string*; greater than
@GES(*string*, *string* **)**	TRUE if first *string* has a higher value than second *string*, or if *string*s are identical; greater than or equal

Before these functions perform a comparison, both strings are completely expanded. Then the ASCII value of the first character in the first string is compared to the ASCII value of the first character in the second string. If they differ, then the string with the higher ASCII value is to be considered to be greater. If the first characters are the same, the process continues with the second character in each string, and so on. Only two strings of equal length that contain the same characters in the same order are equal.

Example:

Before Macro Expansion	After Macro Expansion
`@EQS("ABC","ABC")`	`01H (TRUE).` `The character strings are identical.`
`@EQS("ABC","ACB")`	`00H (FALSE).`

`@LTS("CBA","cba")`	`01H (TRUE).`
	`The lower case characters have a`
	`higher ASCII value than upper case.`

`@GES("ABC","ABC")`	`00H (FALSE).`
	`The space at the end of the second`
	`string makes the second string`
	`greater than the first one.`

`@GTS("16D","11H")`	`01H (TRUE).` `ASCII '6' is greater than ASCII '1'.`

The strings to the string comparison macros have to follow the rules of the parameter-type *string* described earlier.

```
@MATCH(NEXT, LIST, "CAT, DOG_MOUSE")

@EQS(@NEXT, "CAT")             -> 01H
@EQS("DOG", @SUBSTR(@LIST, 1,3))   -> 01H
```

2.6.7 DEFINED FUNCTION

The DEFINED function can be used to check if an *identifier* is defined or not. The function can only be used in expressions. It returns 1 if the *identifier* is defined, and 0 if the *identifier* is not defined.

Syntax:

@DEFINED([@] *identifier* **)**

Example:

The next lines ensure that the macro PECDEF is defined:

```
@IF ( !@DEFINED( @PECDEF ) )
     @DEFINE PECDEF
          PECDEF  PECC0-PECC7
     @ENDD
@ENDI

@PECDEF
```

2.6.8 CONSOLE I/O BUILT-IN FUNCTIONS

Two built-in functions, IN and OUT, perform console I/O. They are line-oriented. IN outputs the characters '>>' as a prompt to the console, and returns the next line typed at the console including the line terminator. OUT outputs a *string* to the console; the return value of OUT is the null *string*.

The results of an @IN call (of the input) is interpreted as a *macro-string*. IN can also be used everywhere where a *macro-string* is allowed.

Syntax:

@IN

@OUT(*string* **)**

Example:

```
@OUT( "ENTER NUMBER OF PROCESSORS IN SYSTEM" )
@SET( PROC_COUNT, @IN)
@OUT( "ENTER THIS PROCESSOR'S ADDRESS" )
ADDRESS SET @IN
@OUT( "ENTER BAUD RATE" )
@SET( BAUD, @IN )
```

The following lines would be displayed on the console:

```
ENTER NUMBER OF PROCESSORS IN SYSTEM >> user response
ENTER THIS PROCESSOR'S ADDRESS >> user response
ENTER BAUD RATE >> user response
```

OUT outputs an *end-of-line* only if it is specified inside its *string* by '\n'.

Example:

```
@OUT( "Line with a new-line at the end\n" )
```

2.6.9 COMMENT FUNCTION

The macro processing language can be very subtle, and the operation of macros written in a straightforward manner may not be immediately obvious. Therefore, it is often necessary to comment macro definitions.

Syntax:

@"*text*"

or

@"*text end-of-line*

The comment function always evaluates to the null *string*. Two terminating characters are recognized: the quotation mark **"** and the *end-of-line* (line-feed character, ASCII 0AH). The second form of the call allows macro definitions to be spread over several lines, while avoiding any unwanted *end-of-line*s in the return value. In either form of the comment function, the *text* or comment is not evaluated for macro calls.

Example:

```
@DEFINE MOVE_ADD_GEN( SOURCE, DEST, COUNT ) @LOCAL ( LABEL )
      MOV R1, #@SOURCE  @"@SOURCE must be a word address"
      MOV R2, #@DEST    @"@DEST must be a word address"
@LABEL:                 @"This is a local label.
@"End of line is inside the comment!
      MOV R4, R1
      SUB R1, #1
      ADD R4, R0
      MOV R5, R2
      SUB R2, #1
      ADD R5, R0
      MOV R7, [R4]
      MOV [R5], R7
      MOV R7, R1
      SUB R7, #@SOURCE - @COUNT
      CMP R7, #0        @"@COUNT must be a constant"
      JMP EQ, @LABEL
@ENDD
```

Call the above macro:

```
@MOVE_ADD_GEN( TAB1, TAB2, 100T )
```

Return value from above call:

```
     MOV R1, #TAB1
     MOV R2, #TAB2
LABEL_001:          MOV R4, R1
     SUB R1, #Q
     ADD R4, R0
     MOV R5, R2
     SUB R2, #1
     ADD R5, R0
     MOV R7, [R4]
     MOV [R5], R7
     MOV R7, R1
     SUB R7, #TAB1 - 064h
     CMP R7, #0
     JMP EQ, LABEL_001
```

Note that the comments that were terminated with the *end-of-line* removed the *end-of-line* character along with the rest of the comment.

The '@' character is not recognized as flagging a call to the macro preprocessor when it appears in the comment function.

At the top level of the processed file a ";" (semicolon) will skip all characters until end-of-line. This only applies to the top level. Inside macro bodies (including built-in macros), the preprocessor reads the semicolon as a normal ASCII character. Example:

```
;@IF(1)@OUT("Hello World")@ENDI
@IF(1);@OUT("Hello World")@ENDI
```

will result in the following source file:

```
;@IF(1)@OUT("Hello World")@ENDI
;
```

and the string "Hello World" will be output to the screen once. That is, the first macro @IF is not parsed due to the semicolon at the start of the line. The second @IF is parsed, as is the @OUT macro. Although the latter is preceded by a semicolon, because it is inside a macro body it is parsed nonetheless.

2.6.10 OVERVIEW MACRO BUILT-IN FUNCTIONS

This section contains an overview of the syntax for all macro built-in functions. All macro keywords are preceded by the character '@'. All characters and tokens illustrated in **bold print** belong to the macro syntax.

1) ***Macro definition***

@[*]DEFINE *macro-name* [**(** *parameter-list* **)**] [**@LOCAL(** *locallist* **)**]
macro-body
@ENDD

parameter-list: empty
or *identifier* [, *identifier*]...

local-list: *identifier* [, *identifier*]...

2) ***'Calculating' Functions***

@SET(*macro-variable*, *expression* **)**
@EVAL(*expression* **)**

3) ***'Controlling' Functions***

@IF(*expression* **)**
statements
[**@ELSE**
statements]
@ENDI

@WHILE(*expression* **)**
statements
@ENDW

@REPEAT(*expression* **)**
statements
@ENDR

@BREAK ; Break current @WHILE or @REPEAT structure
@EXIT ; Terminates expansion of the current macro
@ABORT(*expression* **)** ; Terminates macro preprocessor with given exit
; status

4) ***'String-Processing' Functions***

Definition *'string'*: **"***text***"**

or *macro-string*

or *string*-returning functions (@EVAL, @LEN, @SUBSTR, @EQS, @NES, @LTS, @LES, @GTS, @GES, @IN)

@LEN(*string* **)**

@SUBSTR(*string*, *expression* **,** *expression* **)**

@MATCH(*macro-string*, [*macro-string* **,**] *string* **)**

5) ***'String-Comparing' Functions***

@EQS(*string*, *string* **)**

@NES(*string*, *string* **)**

@LTS(*string*, *string* **)**

@LES(*string*, *string* **)**

@GTS(*string*, *string* **)**

@GES(*string*, *string* **)**

6) ***'Identifier check' Function***

@DEFINED([@] *identifier* **)**

7) ***'Input/Output' Functions***

@IN

@OUT(*string* **)**

8) ***MACRO Comment***

@"*text*[**"**]

9) ***The MACRO Call***

@macro-name [**(** *actual-parameter-list* **)**]

actual-parameter-list:		empty
	or	*actual-parameter* [**,** *actual-parameter*]...
actual-parameter:		identifier
	or	number
	or	*string*
	or	*@formal-parameter*
	or	@[*]*macro-token*
macro-token:		*macro-name ...*
	or	*macro-variable*
	or	*macro-string*

@macro-variable

@macro-string

10) ***MACRO Expression***

Valid operands:

- *number* (binary, octal, decimal, hexadecimal)
- *macro-variable*
- *macro-string* (if its contents represents an *expression* part)
- *actual-parameter* (if its contents represents an *expression* part)
- *macro-name* (if the call's expansion results to an *expression*-part)
- *string*-comparing function (@EQS, @NES, @LTS, @LES, @GTS, @GES)
- @DEFINED-function
- @EVAL-function
- @LEN-function

Valid operators (in descending precedence):

Binary operators (left-associated) Unary operators (right-associated):

1. '(' ')'
2. HIGH LOW '+' '-' '~'
3. '*' '/' MOD '%' SHL '<<' SHR '>>'
4. '+' '-'
5. LT '<' LE '<=' GT '>' GE '>=' ULT ULE UGT UGE EQ '==' NE '!='
6. NOT '!'
7. AND '&' '&&'
8. XOR '^' OR '|' '||'

Unary operators (right-associated):

HIGH LOW NOT '!' '~' '+' '-'

2.7 ADVANCED M166 CONCEPTS

For most programming problems, **m166** as described above, is sufficient. However, in some cases, a more complete description of the macro preprocessor's function is necessary. It is impossible to describe all of the possibilities of the macro preprocessor in a single chapter. Specific questions to **m166** can easily be answered by simple tests following the given rules.

2.7.1 DEFINITION AND USE OF MACRO NAMES/TYPES

You can use three different types of macro definitions. These three types are:

1. definition of a macro call with DEFINE
2. definition of a macro-variable with SET
3. definition of a macro-string with MATCH.

2.7.1.1 DEFINITION OF A MACRO CALL WITH DEFINE

A macro call contains, as a rule, actions like control structures, macro calls, *macro-variables*, *macro-string* definitions, parameter evaluations, calculation operations, etc.

Limitations:

- A macro call cannot contain a definition of another macro call.
- Forward references are not allowed.

These limitations are necessary to detect errors in the early stages (during the definition) and to test the use of *macro-names* and types. However, these restrictions do not affect the performance scope of the macro preprocessing.

A macro call can be inserted in various ways (macro call). The number of actual parameters is dependent on the number of the parameters during the definition of the macro call.

- A macro call can appear in an assembly *statement*.
- A macro call can appear in a macro call definition. Expansion (in literal mode the macro call itself) is entered in the body of the macro call defined.
- A macro call can appear in the actual parameter list of a macro call. The actual parameter contains the expansion of the macro call (in literal mode the macro itself).
- A macro call can be inserted in an *expression* when its *macro-body* contains a partial *expression*.
- A macro call can purposely be used during the definition of a *macro-string*. The macro call then appears in the definition *string*. Expansion of the macro call occurs when the *macro-string* is used.

The actual parameter list (during a macro call) consists of tokens separated by commas. These tokens can be any of the following:

- A number
  Represented in hexadecimal format when actual parameters are used.

  Examples: `13-> 0Dh, 21 -> 015h`

  A parameter passed as a number is always considered as a numerical value. The following applies in general: If a number is to be interpreted as a *string*, this must be enclosed in quotation marks when entered.

- An identifier
  Is expanded in the same manner as it was specified as an actual parameter.

  Example: `DB, byte-var`

- A *string*
  A macro-name in the string is expanded first when the actual parameters are used.

  Example: `"13" -> 13, "1 + @VARS5 +3" -> 1 + 05h +3`

- A *macro-name*
  In normal mode, the *macro-name* is expanded in the actual parameter. In literal mode, the *macro-name* itself appears in the actual parameter and is expanded first when used.

  Example: `@MC_VAR, @*MC1(dw).`

- A parameter of an actual macro call.
  This allows parameters to be further reached.

2.7.1.2 DEFINITION OF A MACRO VARIABLE WITH SET

Syntax:

@SET(*macro-variable*, *expression* **)**

A *macro-variable* represents a numerical value. Its expansion always results in hexadecimal representation. This variable can be used similar to a macro call (in assembly *statement*s, in a macro call definition, in actual parameter lists of a macro call, in *expressions*, during the definition of a *macro-string* in the definition *string*).

If an actual parameter is a number, this can be used in the *macro-body* using the corresponding formal parameters, similar to *macro-variable*.

2.7.1.3 DEFINITION OF A MACRO STRING WITH MATCH

Syntax:

@MATCH(*macro-string***,** [*macro-string***,**] *string* **)**

MATCH defines a *macro-string* in the sense of simple *text* replacement, or it processes *text* lists.

Example:

```
@Match( MS1, "DB 'text'" )
@Match( MLS1, MLS2, "10, 20, 30")
```

The contents of a *macro-string* is not tested at the time of the definition. For more information, see section 2.6.5.3 *MATCH Function*.

A *macro-string* can be used similar to a macro call in assembly *statement*s, in a macro call definition, in actual parameter lists of a macro call, in *expression*s, during the definition of a *macro-string* in the definition *string* and in built-in functions that allow a *string*. If an actual parameter is a *string*, this can be used in the macro-body using the corresponding formal parameters, similar to a *macro-string*.

2.7.2 SCOPE OF MACRO, FORMAL PARAMETERS AND LOCAL NAMES

All *macro-names* are known globally. The scope of formal parameters and local names is from their definition to the end of the *macro-body*. This is true even if you redefine them.

2.7.3 REDEFINITION OF MACROS

All macro identifiers with a leading '@' character, which are called like a user-defined macro (and, of course, user-defined) can be redefined. When redefining macros, the number of parameters can be changed. A warning message is, however, issued when the macro type is changed during the redefinition (i.e. when the name of a prior *macro-string* is used for the definition of a macro-variable).

2.7.4 LITERAL VS. NORMAL MODE

In normal mode, the macro preprocessor scans *text* looking for the '@' character. When it is found, it begins expanding the macro call. Parameters are substituted and macro calls are expanded. This is the normal operation of the macro preprocessor, but sometimes it is necessary to modify this mode of operation. The most common use of the literal mode is to prevent macro expansion. The literal character '*' in DEFINE prevents the expansion of macros in the *macro-body* until the macro is called.

When the literal character is placed in a DEFINE call, the macro preprocessor shifts to literal mode while expanding the call. Macro comments are processed, any calls to other macros are not expanded.

A macro definition (in regard to the macro parameter) in literal mode is always then necessary when formal parameters are used as: actual parameters, user-defined macros or as parameters to built-in functions.

Moreover, the definition of a macro in literal mode can save working memory space if additional macro calls follow in the body of this macro. This is because these calls are already expanded fully in the *macro-body* by the definition in normal mode. However, in literal mode only the calls are entered. In some situations, it may also be necessary that the use of the literal mode is not used for the purpose of 'logical flow' of user macros.

The *macro-body* is not expanded in literal mode, but a syntax check is performed to point out errors to the user in the macro definition. Forward referencing of macros is not supported.

Example:

The following example illustrates the difference between defining a macro in literal mode and normal mode:

```
@SET( TOM, 1 )

@*DEFINE M1 ()
     @EVAL( @TOM )
@ENDD

@DEFINE M2 ()
     @EVAL( @TOM )
@ENDD
```

When M1 and M2 are defined, TOM is equal to 1. The *macro-body* of M1 has not been evaluated due to the literal character, but the *macro-body* of M2 has been completely evaluated, since the literal character is not used in the definition. Changing the value of TOM has no affect on M2, it changes the return value of M1 as illustrated below:

Before Macro Expansion	**After Macro Expansion**
`@SET( TOM, 2 )`	
`@M1`	`-> 02h`
`@M2`	`-> 01h`

Sometimes it is necessary to obtain access to parameters by several macro levels. The literal mode is also used for this purpose. The following example assumes that the macro M1 () called in the *macro-body* is predefined.

Example:

```
@*DEFINE M2( P1 )
     MOV  R1, @P1
     @M1( @P1 )
@ENDD
```

In the above example, the formal parameter @P1 is used once as a simple place holder and once as an actual parameter for the macro M1().

Actual parameters in the contents must not be known in literal mode, since they are not expanded. If the definition of M2(), however, occurred in normal mode, the macro preprocessor would try to expand the call from M1() and, therefore, the formal parameter @P1 (used as an actual parameter). However, this first receives its value when called from M2(). If its contents happen to be undefined, an error message is issued.

Another application possibility for the literal mode exists for macro calls that are used as actual parameters (*macro-string*s, *macro-variables*, macro calls).

Example:

```
@M1( @*M2 )
```

The formal parameter of M1 was assigned the call from M2 ('@M2') by its expansion. M2 is expanded from M1 when the formal parameters are processed.

In normal mode, M2 is expanded in its actual parameter list immediately when called from M1. The formal parameters of M1 in its body are replaced by the prior expanded *macro-body* from M2.

The following example shows the different use of macros as actual parameters in the literal and normal mode.

Example:

```
@SET( M2, 1 )

@*DEFINE M1 ( P1 )
     @SET( M2, @M2 + 1 )
     @M2, @P1
@ENDD

@M1( @*M2 )          -> 02h, 02h
@M1( @M2 )      -> 03h, 02h
@M1(  @*M2 )         -> 04h, 04h
```

2.7.5 MULTI-TOKEN PARAMETER

The actual parameters shown in the prior examples were all restricted to a token. What, however, occurs when several tokens are passed as one parameter?

Example:

```
@DEFINE DW( LIST, NAME )
     @NAME  DW  @LIST
@ENDD
```

The macro DW() expands DW *statement*s, where the variable NAME represents the first parameter and the *expression* LIST represents the second parameter.

The following expansion should be obtained by the call:

```
PHONE DW 198H, 3DH, 0F0H
```

If the call in the following form:

```
@DW(198H, 3DH, 0F0H, PHONE )
```

occurs, the macro preprocessor would report 'Too many macro parameters', since all tokens separated from one another by a comma are interpreted as actual parameters.

In order to change this method of interpretation, all tokens that are to be combined for an individual parameter must be identified as a parameter *string* and set in quotation marks:

```
@DW("198H, 3DH, 0F0H", PHONE)
```

The placing of actual parameters in quotation marks (parameter *string*s) has still another effect when macro calls are used as parameters. Since parameter *string*s are not expanded, and since their contents are passed 'unchanged' to the formal parameters, a macro call identified as a parameter *string* corresponds to a call in literal mode. The calls represented in the following example are, therefore, identical.

Example:

```
@M1( "@M2" )
@M1( @*M2 )
```

2.7.6 VARIABLE NUMBER OF PARAMETERS

For creating possibly efficient macros, the option of passing parameters in variable numbers is an essential feature. The following algorithms are recommended for processing these parameters:

```
@*DEFINE macro_name( ParameterList )
      .
      .
      @MATCH( P1, ParList, @ParameterList )
      @WHILE( @LEN( @P1 ))
      .
      .
      statements
      .
      .
      @MATCH( P1, P2, @P2 )
      @ENDW
      .
      .
@ENDD
```

As already described in the previous section, several tokens that are to be interpreted as one parameter are to be represented as a parameter *string*. This requirement is used to pass a macro a desired number of parameters, polished as one parameter.

Example:

```
@"-----------------------------------
@"Macro for saving registers
@"-----------------------------------
@*DEFINE PushReg( RegList )
     @MATCH( Reg, List,  @RegList )
     @WHILE( @LEN( @Reg ) )
        PUSH @Reg
        @MATCH(Reg, List, @List )
     @ENDW
@ENDD

@PushReg ("R0, R1")
```

The macro PushReg("R0, R1") saves all registers that are contained in passed register lists. The register list is identified as a parameter *string* when called from PushReg("R0, R1") and passed as a parameter to the macro. With use of the WHILE loop and the MATCH function, all partial parameters of the returned parameters are processed by the macro.

2.7.7 PARAMETER TYPE STRING

The macro preprocessor provides the internal type 'STRING' for parameter *string*s. This allows the following to be performed:

1. Type test during the processing of this parameter when expanded by the macro
2. Interpretation of the call and application
3. A precise error test.

Example:

```
@*DEFINE M1( P1 )
     @LEN( @P1 )
@ENDD
```

A *string* that is to be passed as a parameter and, in addition, to be interpreted as a *string* by the macro expansion when this parameter is processed should, be specified in the following manner (this is in accordance with the standard *text* replacement rules of the macro preprocessor):

```
@M1("""Test_String""")
```

Quotation marks that should belong to the *string* must be specified twice. The formal parameters of M1 are additionally replaced by "Test_String". When no quotation marks are used during the call M1("Test_String"), "Test_String" is returned and the parameters are not recognized as a *string*. The quotation marks enclosing the *string* are eliminated by the macro preprocessor in the entry in the parameter list.

The concept of the parameter type 'STRING' allows, however, the user to avoid this unclear parameter 'string' definition. Instead, the parameter *string* specified is assigned the type 'STRING' by the macro preprocessor and the expansion of the formal macro parameters are performed when the macro is expanded. This is independent of the type and application of the parameter.

The following rules apply here:

Everywhere where a *string* is syntactically expected (see macro syntax overview '*string*', section 2.6.10, *Overview Macro Built-in Functions*), a formal parameter specified here is replaced with its actual parameter. If this is a 'STRING' type, it is interpreted as a *string*; i.e. this is when the formal parameter is used as actual parameters from *string* processing built-in functions. If the type is not 'STRING', a corresponding error message appears.

If no interpretation as *string* is possible, the formal parameter is replaced with its actual parameter, without considering the type.

Example:

```
@*DEFINE M0( P1 )
     MOV @P1
@ENDD

@*DEFINE M1( P1 )
     MOV R1, @LEN( @P1 )
     @P1
@ENDD

@*DEFINE M2( P1 )
     @M1( @P1 )
     @P1
@ENDD

@*DEFINE M3( P1 )
     @P1
@ENDD
```

```
@M0( "R1, R0" )
@M1( "R1, R0" )
@M2( "R1, R0" )
@M1( "R1, @M3( 33 )" )
@M2( "R1, @M3( 44 )" )
```

Macro Call	**Expansion**
`@M0( "R1, R0" )`	`MOV R1, R0`
`@M1( "R1, R0" )`	`MOV R1, 06h` `R1, R0`

`@M2( "R1, R0" )`	`MOV R1, 06h`
	`R1, R0`
	`R1, R0`

`@M1( "R1, @M3( 33 )" )`	`MOV R1, 0Dh` `R1,  021h`

`@M2( "R1, @M3( 44 )" )`	`MOV R1, 09h`
	`R1,  02Ch`
	`R1,  02Ch`

- When M0() is expanded, the formal parameter is replaced by the actual parameter, without a type check.
- When M1() is expanded, the actual parameter is checked for the type 'STRING', since the built-in function LEN expects a *string* parameter.
- When M2() is expanded, M1 is called and the actual parameter is reached. Proceed like for M1().
- When the M1() is called, the actual parameter contains a macro call. This is not expanded, in accordance with the rules described in section 2.7.4. Proceed like for M1() above.
- When expanding M2(), M1() is recalled and the actual parameter is reached (no expansion of M3). Proceed like for M1() above.

2.7.8 ALGORITHM FOR EVALUATING MACRO CALLS

The algorithm of the macro preprocessor used for evaluating the source file can be broken down into 6 steps:

1. Scan the input until the '@' character is found.
2. Isolate the *macro-name*.
3. If macro has parameters, expand each parameter from left to right (initiate step one for actual parameter) before expanding the next parameter.
4. Substitute actual parameters for formal parameters in *macro-body*.
5. If the literal character is not used, initiate step one on *macro-body*.
6. Insert the result into output stream.

The terms 'input stream' and 'output stream' are used because the return value of one macro may be a parameter to another. On the first iteration, the input stream is the source line. On the final iteration, the output stream is passed to the assembler.

Example:

The examples below illustrate the macro preprocessor's evaluation algorithm:

```
@SET( TOM, 3 )

@*DEFINE STEVE ()
@SET( TOM, @TOM -1 ) @TOM
@ENDD

@DEFINE ADAM( A, B )
     DB  @A, @B, @A, @B, @A, @B
@ENDD
```

The call ADAM is presented here in the normal mode with TOM as the first actual parameter and STEVE as the second actual parameter. The first parameter is completely expanded before the second parameter is expanded. After the call to ADAM has been completely expanded, TOM will have the value 02h.

Before Macro Expansion **After Macro Expansion**

```
@ADAM( @TOM, @STEVE )  -> DB 03h, 02h, 03h, 02h, 03h, 02h
```

Now reverse the order of the two actual parameters. In this call to ADAM, STEVE is expanded first (and TOM is decremented) before the second parameter is evaluated. Both parameters have the same value.

```
@SET( TOM, 3 )
@ADAM( @STEVE, @TOM )  -> DB 02h, 02h, 02h, 02h, 02h, 02h
```

Now we will literalize the call to STEVE when it appears as the first actual parameter. This prevents STEVE from being expanded until it is inserted in the *macro-body*, then it is expanded for each replacement of the formal parameters. TOM is evaluated before the substitution in the *macro-body*.

```
@SET( TOM, 3 )
@ADAM( @*STEVE, @TOM ) -> DB 02h, 03h, 01h, 03h, 00h, 03h
```

MACRO PREPROCESSOR

CHAPTER 3

ASSEMBLER

TASKING

CHAPTER 3

3.1 DESCRIPTION

The C166 assembler A166 is a three pass program:

Pass 1 Reads the source file and performs lexical actions such as evaluating equate statements. This pass will generate an intermediate token file.

Pass 2 Performs optimization of jump instructions.

Pass 3 Generates machine code and list file.

The assembler is source compatible (mnemonics, directives, controls and invocation files) with the Infineon assembler. Some directives are more flexible and the scope of the jump optimization is larger. Some directives are implemented by the macro preprocessor **m166**.

Because of the three passes, the assembler can perform optimization for the generic jump and call instructions (jmp/call), even with forward references.

File inclusion and macro facilities are not integrated into the assembler. Rather, they are provided by the macro preprocessor **m166**, which is supplied as a separate program. The assembler can be used with or without the **m166** macro preprocessor. Alternatively, another macro preprocessor, such as a standard C-preprocessor may be used.

3.2 INVOCATION

The command line invocation of **a166** is:

a166 [*source-file*] [@*invocation-file*] [*control-list*] [**TO** *object-file*]
a166 –V
a166 –?
a166 –f *invocation_file*

–V displays a version header

–? shows the usage of **a166**

–f with this option you can specify an invocation file. An invocation file may contain a control list. The *control-list* can be one or more assembler controls separated by whitespace. All available controls are described in chapter *Assembler Controls*. A combination of invocation file and control list on the invocation line is also possible. The *source-file* and **TO** *object-file* are also allowed in the invocation file.

Instead of using the option -f you can also use the "@"-character.

When you use EDE, you can control the assembler from the **Application** and **Assembler** entries in the **Project | Project Options** dialog.

When you use a UNIX shell (**C-shell, Bourne shell**), options containing special characters (such as '**( )**') must be enclosed with **" "**. The invocations for UNIX and PC are the same, except for the **–?** option in the **C-shell**.

3.2.1 INPUT FILES AND OUTPUT FILES

The following is a short description of all the input files and output files the assembler deals with:

Assembly source file

This is the input source of the assembler. This file contains assembly code which is either hand written, generated by **c166** or processed by **m166**. Any name is allowed for this file. If no file extension is used **.src** is assumed.

Invocation file

This is an input file to control the assembler. All general controls are allowed in this file. Input files and output files can be defined. Any name is valid and must be preceded by a '@' on invocation. The invocation files can be nested up to eight levels.

Object file

The output file of the assembler which contains the object code. By default the name of the assembly source file with the extension replaced by **.obj**. The name can also be user defined via TO or the OBJECT control.

List file

An output file containing information about the generated object code. By default the name of the assembly source file with the extension replaced by `.lst` is used. The name can also be user defined by the PRINT control.

Error list file

An output file with the errors detected during assembly. Must be defined by an ERRORPRINT control. Otherwise error messages are printed to standard output. The default name is the input filename extended with `.erl`.

3.3 SECTIONS AND MEMORY ALLOCATION

A section is a logical piece of code or data which will be assigned to physical memory as a single block. Every section has a name and a section type (CODE, DATA, LDAT, PDAT, HDAT or BIT). There are two types of sections: relocatable sections and absolute sections.

The assembler can handle up to 254 different sections in a module. Each module consists of at least one section. Sections in different modules, but with the same name will be combined into one section by the linker/locator.

See the paragraph *Sections* in the chapter *Assembly Language* for more information about sections.

3.4 ENVIRONMENT VARIABLES

a166 uses the following environment variables:

TMPDIR	The directory used for temporary files. If this environment variable is not set, the current directory is used.
A166INC	The directory where STDNAMES files can be found. See the DEF directive and the STDNAMES assembler control for the use of STDNAMES files. A166INC can contain more than one directory. Separate multiple directories with '**;**' for PC ('**:**' for UNIX).

Examples:

PC:

```
set  TMPDIR=\tmp
set  A166INC=c:\c166\include
```

UNIX:

if you use the Bourne shell (sh)

```
TMPDIR=/tmp
A166INC=/usr/local/c166/include
export TMPDIR A166INC
```

if you use the C-shell (csh)

```
setenv  TMPDIR   /tmp
setenv  A166INC  /usr/local/c166/include
```

CHAPTER 4

ASSEMBLY LANGUAGE

TASKING

4 CHAPTER

4.1 INPUT SPECIFICATION

An assembly program consists of zero or one statement per line. A statement may optionally be followed by a comment, which is introduced by a semicolon character (;) and terminated by the end of the input line.

Lines starting with a dollar character (**$**) in the first column are control lines. They are interpreted independently from the rest of the input. The syntax of these lines is described separately in the chapter *Assembler Controls*.

A line with a **#** character in the first position is a line generated by a macro preprocessor to inform the assembler of the original source file name and line number. The format of the remaining lines is given below. A statement can be defined as:

```
[label[:]] [instruction | directive] [;comment]
```

label is an *identifier*. The occurrence of *label*: defines the symbol denoted by *label* and assigns the current value of the location counter to it. The colon ':' is only required for CODE labels.

identifier has to be made up of letters, digits, underscore characters (_) and/or question marks (?). The first character cannot be a digit.

Example:

```
LAB1:  ;This is a label
```

instruction is any valid C166/ST10 assembly language instruction consisting of a mnemonic and one, two, three or no operands. Operands are described in the chapter *Operands and Expressions*. The instructions are described in the hardware manuals.

Examples:

```
EINIT                    ; No operand
BSET ABIT                ; One operand
AND R0, #0H              ; Two operands
BFLDL 0FF0CH, #4, #6     ; Three operands
```

directive any one of the assembler directives; described separately in the chapter *Assembler Directives*.

A statement may be empty.

4.2 SECTIONS

The C166/ST10 family can address 16 Mbytes of memory. The memory map is divided into 256 segments of 64 Kbytes each. To access a memory address 24 bits are required. The CPU uses so called 'BASED' instructions to form the 24 bits. An 24-bit address for a code is produced by a segment base (a 8-bit segment number) and a segment offset (a 16-bit value). An 24-bit address for data is produced by a page base (a 10-bit page number) and a page offset (a 14-bit value).

The assembler **a166** uses sections for addressability in relocatable modules. A section is simply a portion of memory which may be addressed by a section base and an offset. Sections of different modules may be combined to form a group at link-time and sections can have a 'class' name to place different sections near each other in memory by the locator. Because there are different ways to address code and data, there are also different types of sections and groups.

4.2.1 MULTIPLE DEFINITIONS FOR A SECTION

Sections may be opened and closed with a SECTION/ENDS pair within the same module as many times as you wish. All parts of the section which you define are treated by the assembler as parts of one section.

Example:

The following two DATA1 sections:

```
DATA1   SECTION DATA
AWORD1   DW  0
ABYTE1   DB  0
DATA1   ENDS

DATA1   SECTION DATA
AWORD2   DW  0
ABYTE2   DB  0
DATA1   ENDS
```

are the same as:

```
DATA1   SECTION DATA
AWORD1   DW  0
ABYTE1   DB  0
AWORD2   DW  0
ABYTE2   DB  0
DATA1   ENDS
```

When a section is re-opened, its attributes need not be specified. The attributes can not be changed. The following example produces an error.

Example:

```
DATA1       SECTION  DATA AT  03F00H
      .
      .
      .
DATA1       ENDS

DATA1       SECTION  DATA AT  0C00H    ; error !
      .
      .
      .
DATA1       ENDS
```

4.2.2 'NESTED' OR 'EMBEDDED' SECTIONS

Sections are never physically nested or embedded in memory. However, you may nest data section definitions in your program. This is only a logical nesting and not a physical nesting in memory. Nesting of CODE sections is not allowed.

Example:

The following example is legal:

```
CODE1       SECTION CODE ; Begin CODE1
     .
     .
     .
    DATA1 SECTION DATA   ; Begin DATA1, stop
          .              ; assembling CODE1
          .
          .
    DATA1 ENDS           ; End DATA1, continue
     .                   ; assembling CODE1
     .
     .
CODE1       ENDS
```

The assembler treats the CODE1 section separately from the DATA1 section. The contents of the DATA1 section are not contained within the CODE1 section. The following example produces an error because the SECTION/ENDS pair must match as shown in the example above.

```
CODE1       SECTION CODE ; Begin CODE1
     .
     .
     .
    DATA1 SECTION DATA   ; Begin DATA1, stop
          .              ; assembling CODE1
          .
          .
CODE1       ENDS         ; Error!! Cannot close
     .                   ; CODE1 before closing
     .                   ; DATA1
     .
    DATA1 ENDS
```

Up to ten nested SECTION/ENDS pairs are supported.

4.3 EXTEND BLOCKS

The C16x/ST10 and XC16x/Super10 architectures have instructions which create extend blocks:

- begin atomic sequence ATOMIC
- begin extended register sequence EXTR
- begin extended page sequence EXTP
- begin extended page and register sequence EXTPR
- begin extended segment sequence EXTS
- begin extended segment and register sequence EXTSR

An extend block starts after one of the extend instructions is issued and ends after the number of instructions as issued with the extend instruction.

Example:

```
EXTR #2              ; 2 extended instr.
MOV  PT0, #value0    ; extend SFR
MOV  PT1, #value1    ; extend SFR
MOV  PSW, #valueX    ; standard SFR
```

Branching into or from an extend block probably introduces a 'virtual extend block'. See also chapter *Derivative Support*.

4.4 THE SOFTWARE INSTRUCTION SET

The software instruction set knows all instructions of the hardware instruction set and some additional *mnemonics*. These additional *mnemonics* are added to allow easy and comfortable programming.

The hardware *mnemonics* that logically belong together are combined in one software *mnemonic*. The assembler will determine by means of the combination of *operands*, which opcode is entered in the instruction format. This means that based on the combination of *operands* the appropriate hardware *mnemonic* is chosen.

Example

```
ADD  RL0, #3    will result in    ADDB RL0, #3
```

Software Mnemonic	Hardware Mnemonic		Operation Type
ADD	ADDW ADDB	(Integer Addition)	Word Byte
ADDC	ADDCW ADDCB	(Add with Carry)	Word Byte
CPL	CPLW CPLB	(1's complement)	Word Byte
NEG	NEGW NEGB	(2's complement)	Word Byte
SUB	SUBW SUBB	(Subtraction)	Word Byte
SUBC	SUBCW SUBCB	(Subtraction with Carry)	Word Byte
AND	ANDW ANDB BAND	(Logical And) (Bit Logical And)	Word Byte Bit
CMP	CMPW CMPB BCMP	(Compare Integer) (Bit-to-Bit Compare)	Word Byte Bit
MOV	MOVW MOVB BMOV	(Move Data) (Bit-to-Bit Move)	Word Byte Bit
OR	ORW ORB BOR	(Logical Or) (Bit Logical Or)	Word Byte Bit
XOR	XORW XORB BXOR	(Logical Exclusive Or) (Bit Logical Exclusive Or)	Word Byte Bit
CALL	CALLA CALLI CALLR CALLS		Absolute Indirect Relative Inter-segment

Software Mnemonic	Hardware Mnemonic	Operation Type
JMP	JPMA JMPI JMPR JMPS	Absolute Indirect Relative Inter–segment
RET	RETN RETI RETS RETV	NEAR proc. type TASK proc. type FAR proc. type –

Table 4-1: Software instruction set

RETV is a virtual return instruction. It disables generation of the warning message "procedure *procedure-name* contains no RETurn instruction". No code is generated for this instruction. You can put this instruction just before the ENDP directive of the procedure that caused the warning message.

4.5 EXTENDED INSTRUCTION SET

Once the extended instructions are enabled by the EXTINSTR control, the assembler performs extra checks for these instructions. The extended instructions are:

- begin atomic sequence ATOMIC
- begin extended register sequence EXTR
- begin extended page sequence EXTP
- begin extended page and register sequence EXTPR
- begin extended segment sequence EXTS
- begin extended segment and register sequence EXTSR

Each of these instructions has an operand which indicates the number of following instructions which are part of the sequence. This number must be in the range 1-4. The assembler treats the instructions in the indicated range as an extend block.

4.5.1 EXTEND BLOCKS

An extend block starts after one of the extend instructions is issued and ends after the number of instructions as issued with the extend instruction.

Example:

```
EXTR #2
MOV  PT0, #value0
MOV  PT1, #value1
CALL procedure
```

The extend block starts in this example at the first MOV instruction. The CALL is the first instruction outside the extend block.

The assembler performs some extra checks on the instructions and their operands within extend blocks. The checks which depend on the type of extension are described in the sections 4.5.3 - 4.5.5. Checks performed in all extend blocks are:

- Branching into and from extend blocks. This has the risk of introducing 'virtual extend blocks'.
- Nesting of extend blocks. This is only allowed in some special cases.

Using non-sequential instructions (branches) within extend blocks can cause unexpected results. Branching from extend blocks, causes the block to be continued at the target address of the branch. Such a continued block is called a 'virtual extend block'.

The assembler issues a warning when a branch instruction occurs in an extend block and the branch instruction was not the final instruction in that block.

Example:

```
      CMP  R0, #value
      EXTR #4
      JMP  cc_EQ, VirtualEXTRBlock
      MOV  PT0, #value0        ; Extended SFR
      MOV  PT1, #value1        ; Extended SFR
      MOV  PT2, #value2        ; Extended SFR
      MOV  P3, #value3         ; Standard SFR
      JMP  cc_UC, Continue
VirtualEXTRBlock:
      EXTRV#3                  ; Virtual extend
      ADD  PT0, #1             ; Extended SFR
      ADD  PT1, #1             ; Extended SFR
      ADD  PT2, #1             ; Extended SFR
      ADD  P3, #1              ; Standard SFR
Continue:
```

4.5.2 NESTING EXTEND BLOCKS

If an extend instruction occurs within an extend block the assembler issues a warning, unless the instruction is the final instruction of the extend block and it has the same type as the previous extend instruction. If an extend instruction is the last instruction in an extend block and it has the same type as the previous extend instruction, the extend block is expanded with the new block.

Example:

```
ATOMIC    #4
NOP
NOP
NOP
ATOMIC    #2
NOP
NOP
```

The whole instruction sequence in the example is atomic. The following examples causes warnings:

```
ATOMIC    #2
NOP
EXTR      #2   ; must be same as previous extend
NOP
NOP

ATOMIC    #4
NOP
ATOMIC    #2   ; cannot nest extend blocks
NOP
NOP
```

4.5.3 EXTEND SFR INSTRUCTIONS

The instructions EXTR, EXTPR and EXTSR cause the assembler to change checking of the use of REG operands in the extend block.

When EXTSFR is active it is not allowed to use the short (8 bit) absolute addressing mode for a REG operand. The assembler cannot check if the intended register is a register from the standard SFR area or from the extended SFR area. If you want to use an absolute address, then use the 16 bit address or the DEFR directive.

The assembler does not accept the usage of a register from the extended SFR area as a REG addressing mode if the instruction the register is used in is not within an extend block. The assembler also does not accept the usage of a register from the standard SFR area as a REG addressing mode if the instruction is in an extend block.

4.5.4 OPERAND COMBINATIONS IN EXTEND SFR BLOCKS

Outside Extend SFR sequences, Extended SFRs cannot be accessed via the 'reg' or 'bitaddr' addressing modes.

op1 \ op2	GPR	SFR	ESFR	MEM	CONST	none	SFRBIT	ESFRBIT
GPR	Rn,Rn	reg,mem	reg,mem	reg,mem	reg,#	reg	–	–
SFR	reg,mem	reg,mem mem,reg	reg,mem	reg,mem	reg,#	reg	–	–
ESFR	mem,reg	mem,reg	FAULT!	FAULT!	FAULT!	FAULT!	–	–
MEM	mem,reg	mem,reg	FAULT!	–	–	–	–	–
SFRBIT	–	–	–	–	–	bit	bit,bit	FAULT!
ESFRBIT	–	–	–	–	–	FAULT!	FAULT!	FAULT!

Table 4-2: Operand Combinations outside Extend SFR sequence

Inside Extend SFR sequences, Standard SFRs cannot be accessed via the 'reg' or 'bitaddr' addressing modes.

op1 \ op2	GPR	SFR	ESFR	MEM	CONST	none	SFRBIT	ESFRBIT
GPR	Rn,Rn	reg,mem	reg,mem	reg,mem	reg,#	reg	–	–
SFR	mem,reg	FAULT!	mem,reg	FAULT!	FAULT!	FAULT!	–	–
ESFR	mem,reg	reg,mem	reg,mem mem,reg	reg,mem	reg,#	reg	–	–
MEM	mem,reg	FAULT!	mem,reg	–	–	–	–	–
SFRBIT	–	–	–	–	–	FAULT!	FAULT!	FAULT!
ESFRBIT	–	–	–	–	–	bit	FAULT!	FAULT!

Table 4-3: Operand Combinations inside Extend SFR sequence

4.5.5 PAGE EXTEND AND SEGMENT EXTEND INSTRUCTIONS

The instructions EXTP, EXTPR and EXTSR cause the assembler to change checks on the operands in the extend block. The page extend instructions cause the processor to use the page number supplied with the page extend instruction instead of the page number in a DPP register. The segment extend instructions cause the processor to use the segment number supplied with the segment extend instruction instead of addressing via the page number in a DPP register.

Because the DPP registers are not used for addressing in a page extend or segment extend block, a DPP number in bit 14 and 15 of an operand is not allowed. So, each operand (label or expression) which expects a DPP prefix outside a page extend or segment extend block, should not have a DPP prefix or a DPP assumption (ASSUME directive) inside a page extend block. If a DPP prefix or DPP assumption is used in a page extend or segment extend block, the assembler issues a warning. This warning is not issued if the POF operator is used for such an operand in a page extend block or if the POF or SOF operator is used for such an operand in a segment extend block. The POF or SOF operator should be the first operator of an expression.

Example:

```
EXTP #PAG labx, #1   ; extend page
MOV  R0, labx        ; labx is NOT assumed: ok

EXTERN DPP0:labe:WORD
EXTP #PAG labe, #2   ; extend page
MOV  R0, labe        ; labe has DPP prefix:
                     ; warning!
MOV  R0, POF labe    ; POF overrides DPP: ok
```

The extend page and extend segment instructions can only be used in the SEGMENTED and NONSEGMENTED/SMALL memory model.

CHAPTER 5

OPERANDS AND EXPRESSIONS

TASKING

CHAPTER 5

5.1 OPERANDS

An operand is the part of the instruction that follows the instruction opcode. There can be one, two, three or even no operands in an instruction. The operands of the assembly instruction can be divided into the following types:

Operand	Description
Rn, Rm	Direct access to a General Purpose Register (GPR) in the current register bank
REG	Direct access to any GPR or SFR
BITOFF	Direct access to any word in the bit-addressable memory space
BITADDR	Direct access to a single bit in the bit-addressable memory space
MEM	Direct access to any memory location
[Rn], [Rm]	Indirect access to the entire memory space by the content of a GPR
#DATA(*x*)	An immediate constant (*x* = 3, 4, 8 or 16)
#MASK	An immediate byte value to be used as a mask field in Bit Field instructions
CADDR	Absolute 16-bit code address within the current segment for use in branch instructions
REL	Relative offset for a branch instruction
SEG	A code segment number
#TRAP	An interrupt number
CC	A condition code

Table 5-1: Operand Types

A detailed description of the operand types shown above can be found in the C16*x* User's Manual [Infineon Technologies] which belongs to your target.

5.1.1 OPERANDS AND ADDRESSING MODES

The C166/ST10 has several different addressing modes. These are listed below with a short description. A complete description of the addressing modes is given in the C16*x* User's Manual [Infineon Technologies] which belongs to your target.

Short addressing

This addressing mode uses an implicit base offset address to specify a physical 24-bit address.

Memory space: data in GPR, SFR or bit addressable memory space.

Operand types: Rn, REG, BITOFF, BITADDR.

Long addressing

This addressing mode uses one of the four DPP registers to specify a physical 24-bit address.

Memory space: any word or byte data in the entire memory space.

Operand types: MEM.

Indirect addressing

This addressing mode is a mix of short and long addressing. The contents of a GPR specifies a 16-bit address indirectly. One of the four DPP registers is used to specify a physical or 24-bit address.

Memory space: any word or byte data in the entire memory space.

Operand types: [Rn].

Immediate addressing

This addressing mode uses word or byte constants.

Memory space: not relevant.

Operand types: #DATA(*x*), #MASK.

Branch target addressing

This addressing mode uses relative, absolute and indirect modes to specify the target address and segment of a jump or call instruction.

Memory space: any word in the entire memory space.

Object types: REL, CADDR, [Rn], SEG, #TRAP, CC.

5.1.2 OPERAND COMBINATIONS

There are two kinds of operand combinations, real and virtual. **Real** operand combinations are those types of operands combinations which are written in the hardware architectural specification for the C166/ST10 and assigned to the individual hardware instructions. For the option of addressing registers by their absolute memory addresses, additional operand combinations exist that are not explicitly mentioned in the architectural specification. These combinations can not be directly transferred in an instruction format and, therefore, require conversion of the types and values. These combinations are called **virtual** operand combinations.

Example:

The operand combination:

```
R, MEM_WORD     (e.g.: MOV  R5,  WVAR)
```

is a virtual combination and is converted to:

```
REG, MEM_WORD
```

In this sense, the register number of the GPR R5 is internally converted to the register word number. This word number represents an 8-bit address of the 'CPU Virtual General Purpose Register' that lies at the 16-bit address 0FFEAH in the SFR area (Special Function Register).

Example:

The operand combination:

```
REG, R     (e.g.: MOV CP, R5;
            CP = Context Pointer is a SFR)
```

is, likewise, a virtual operand combination and is converted to:

```
MEM_WORD, REG
```

In this case, the register word number of the SFR is internally converted to the 16-bit address of the Special Function Register. In order to guarantee correct addressing in SEGMENTED mode, the user must assign the attribute SYSTEM to a DPP using the ASSUME directive (when assembly in SEGMENTED mode is desired).

Example:

```
ASSUME DPP1:SYSTEM
```

Thereby, you inform the assembler that page number 3 is contained in DPP1 register. You assume the responsibility of ensuring that the DPP is loaded with the value of 3 (page number) at the right time during the execution. This page number is given in an explicit instruction since the assembler cannot check the contents of the DPP register.

The DPP registers are automatically initialized by the processor in NONSEGMENTED mode. The ASSUME instruction is, therefore, omitted.

When converting REG to MEM in SEGMENTED mode, **a166** truncates the address. So DPP is used which is ASSUMED to contain the System page (3).

A summary of the operand combinations is given below preceded by a list explaining the used abbreviations

5.1.2.1 ABBREVIATIONS

Abbreviation	Description
ADDR_BY_DEC_GPR	Indirect data access through GPR that is decremented before the data has been fetched
ADDR_BY_GPR	Indirect data access through GPR
ADDR_BY_GPR_INC	Indirect data access through GPR that is incremented after the indirect data has been fetched
ADDR_BY_GPR_PLUS_C	Indirect data access based on the sum of a GPR and a 16-bit constant base table offset
ADDR_BY_GPRI	Indirect data access through GPR R0, R1, R2 or R3
ADDR_BY_GPRI_INC	Indirect data access through GPR R0, R1, R2 or R3 the respective GPR is incremented after the indirect data has been fetched
BITADDR	A bit address (absolute bit number, a bit name defined by BIT or DBIT)
BWOFF	The offset of the bit-addressable word (SFR, GPR or bit-word) relative to the bit-addressable range

Abbreviation	Description
CC	One of the condition codes
CONST_MASK	Mask for application of BFLDx instructions
CONST_TRAP	Trap number
CONST_DATA3	3-bit immediate constant
CONST_DATA4	4-bit immediate constant
CONST_DATA8	8-bit immediate constant
CONST_DATA16	16-bit immediate constant
EXPL_BITADDR	An explicit bit address (SFR-SymbolName.BitPosition, GPRn.BitPosition (n = 0 - 15), absolute bit word number.bit position absolute bit word address.bit position symbolic bit word.bit position)
MEM_BYTE	A memory address representing BYTE access
MEM_WORD	A memory address representing WORD access
MEM_NEAR	A jump address of type NEAR
MEM_FAR	A jump address of type FAR
R	A GPR: R0 - R15
HR	RL0 - RL7, RH0 - RH7
HREG	A GPR: RL0 - RL7, RH0 - RH7
REG	A GPR or a SFR symbol name
REL	A jump address reachable inside of the displacement of -128 to +127 words
SEG	The segment number of a jump address

Table 5-2: Operand Abbreviations

5.1.2.2 REAL OPERAND COMBINATIONS

ADDR_BY_DEC_GPR, HR ADDR_BY_DEC_GPR, R
ADDR_BY_GPR, ADDR_BY_GPR ADDR_BY_GPR, ADDR_BY_GPR_INC ADDR_BY_GPR, HR ADDR_BY_GPR, MEM_BYTE ADDR_BY_GPR, MEM_WORD ADDR_BY_GPR, R
ADDR_BY_GPR_INC, ADDR_BY_GPR
ADDR_BY_GPR_PLUS_C, HR ADDR_BY_GPR_PLUS_C, R
BITADDR, BITADDR BITADDR, EXPL_BITADDR BITADDR, REL BITADDR, ZERO
BWOFF, CONST_MASK, CONST_DATA8
CC, ADDR_BY_GPR CC, MEM_NEAR CC, REL
CONST_TRAP, ZERO
EXPL_BITADDR, BITADDR EXPL_BITADDR, EXPL_BITADDR EXPL_BITADDR, REL EXPL_BITADDR, ZERO
HR, ADDR_BY_GPR HR, ADDR_BY_GPRI HR, ADDR_BY_GPR_INC HR, ADDR_BY_GPRI_INC HR, ADDR_BY_GPR_PLUS_C HR, CONST_DATA3 HR, CONST_DATA4 HR, HR HR, ZERO

HREG, CONST,DATA16 HREG, MEM,BYTE
MEM_BYTE, ADDR_BY_GPR MEM_BYTE, HREG MEM_BYTE, REG
MEM_WORD, ADDR_BY_GPR MEM_WORD, HREG MEM_WORD, REG
R, ADDR_BY_GPR R, ADDR_BY_GPRI R, ADDR_BY_GPR_INC R, ADDR_BY_GPRI_INC R, ADDR_BY_GPR_PLUS_C R, CONST_DATA3 R, CONST_DATA4 R, CONST_DATA16 R, HR R, MEM_WORD R, R R, ZERO
REG, CONST_DATA8 REG, CONST_DATA16 REG, MEM_BYTE REG, MEM_WORD REG, MEM_NEAR REG, ZERO
REL, ZERO
SEG, MEM_FAR SEG, MEM_NEAR

5.1.2.3 VIRTUAL OPERAND COMBINATIONS

ADDR_BY_GPR ADDR_BY_GPR, REG
HR, CONST_DATA16 HR, MEM_BYTE HR, REG
MEM_BYTE, HR
MEM_WORD, HR MEM_WORD, R MEM_WORD, REG
R, CONST_DATA16 R, MEM_BYTE R, MEM_NEAR R, MEM_WORD R, REG R, ZERO
REG, ADDR_BY_GPR REG, HR REG, MEM_WORD REG, R REG, REG
BITADDR, MEM_WORD
MEM_WORD, BITADDR

5.2 EXPRESSIONS

An operand of an assembler instruction or directive is either an assembler symbol or an expression. The assembler symbols for the C166/ST10 are: SFR names (Bit and Non-Bit Addressable), System bit names and Peripheral bit names. An expression denotes an address in a particular memory space or a number. Expressions that can be evaluated at assembly time are called **absolute expressions**. Expressions where the result can not be known until logical sections have been combined and located are called **relocatable expressions**.

There are some rules and restrictions when an expression is relocatable:

Sections and Groups

The name of a section or group can be used to represent its page or segment number in an expression. This value is relocatable for all sections and groups except for a section defined with the 'AT *expression*' form for the SECTION directive. These values are assigned by the locator. This type of relocatability is called '**base relocatability**'. See the paragraph *Sections* in the chapter *Assembly Language* for more information on sections and groups.

Example:

```
DATAGRP  DGROUP DATA1, DATA2
DATA1    SECTION DATA
         .
         .
DATA1    ENDS

DATA2    SECTION DATA PUBLIC
SEGSTORE DW DATAGRP ; DATAGRP is base relocatable
SEGBASE  DW DATA1   ; DATA1 is base relocatable
DATA2    ENDS
```

Variables and Labels

The offset of any variable or label is relocatable, i.e. variables are '**offset relocatable**'. These values are also assigned by the locator.

Example:

```
DATA1 SECTION DATA
ABYTE DB 0     ; ABYTE and AWORD are relocatable
AWORD DW POF ABYTE ; page offset of ABYTE is not
                   ; known at assembly time
DATA1 ENDS
```

Constants

Constants defined by the EXTERN/EXTRN directive (see chapter *Assembler Directives*) are relocatable. The constant value is unknown at assembly time.

Example:

```
DATA1 SECTION DATA
EXTRN NUM:DATA16
EXVAR DW NUM   ; NUM is relocatable
DATA1 ENDS
```

You can use all operators with both absolute and relocatable expressions.

Expression syntax

The syntax of an *expression* can be any of the following:

- *number*
- *expression_string*
- *symbol*
- *expression binary_operator expression*
- *unary_operator expression*
- **(** *expression* **)**

All types of expressions are explained below and in following sections.

$ represents the current location counter value in the currently active section.

( ) You can use parentheses to control the evaluation order of the operators. What is between parentheses is evaluated first.

Examples:

```
( 3 + 4 ) * 5   ; Result is 35.
                ; 3 + 4 is evaluated first.
3 + ( 4 * 5 )   ; Result is 23.
                ; 4 * 5 is evaluated first.
```

5.2.1 EXPRESSIONS IN THE ASSEMBLER

To allow good checking on DPP prefixes and ASSUMEd DPPs and to have a more consistent type checking of the operands of an expression, the expression handling of the assembler is designed as follows.

The expression handling of the assembler checks the types of the operands left and right of each operator. The expression operand types are divided into two groups:

address types:

NEAR, FAR, BYTE, WORD, BIT, BITWORD, REGBANK and GROUP (DATA or CODE)

constant types:

DATA3, DATA4, DATA8, DATA16 and
INTNO(8bit)

Some operations on *address types* are not allowed.

The following tables show the resulting type after an operation.

Unary operator	Operand Combination	
	Constant	**Address**
POF, SOF	DATA16	
PAG	DATA4 (NOEXTMEM) or DATA16 (EXTMEM)	
SEG	DATA3 (NOEXTMEM) or DATA8 (EXTMEM)	
BOF	DATA4	
other unary operator	No type change	Illegal address operation

Table 5-3: Resulting operand types with unary operators

Binary operator	Operand Combination		
	Constant/Constant	**Address/Constant**	**Address/Address**
– (subtraction)	Highest DATAn remarks: the section information of the left operand is used for the result	Address type remarks: the section information and assume information of the address operand is used for the result	DATA16 remarks: There is no relocation if both address are from same section. DPP prefixes on operands are ignored.
==, !=, >=, <=, >, <, ULT, UGT, ULE, UGE	DATA3		
. (dot)	BIT	BIT remarks: only allowed if type of address is BITWORD	Illegal address operation
other binary operator	Highest DATAn remarks: the section information of the left operand is used for the result	Address type remarks: the section information and assume information of the address operand is used for the result	Illegal address operation

Table 5-4: Resulting operand types with binary operators

Examples:

```
BIT1 + 3                  ; result type is BIT
BIT1 + BIT1               ; illegal address operation
2 + WVAR1                 ; result type is WORD
WVAR2 - WVAR1             ; result type is DATA16
WVAR1 + (WVAR2 - WVAR1)   ; result type is WORD
```

Each operation in an expression yields a new type. So

```
WVAR1 * WVAR2 - WVAR1
```

is not allowed because `WVAR1 * WVAR2` is not allowed. But

```
WVAR1 * (WVAR2 - WVAR1)
```

is allowed because the resulting type of `WVAR2 - WVAR1` is DATA16, and WORD * DATA16 is allowed. The resulting type is WORD.

If the result of the expression is absolute and the type is DATAn, the type used for a DATAn operand of the mnemonic can be different.

Example:

```
EQ1  EQU DATA16 1    ; EQ1 has DATA16 type
MOV  R0, #EQ1        ; MOV REG, #DATA4
```

5.2.2 NUMBER

number can be one of the following:
- *bin_num*B (or *bin_num*Y)
- *dec_num* (or *dec_num*T or *dec_num*D)
- *oct_num*O
- *hex_num*H (or 0X*hex_num*)

Lowercase equivalences are allowed: b, y, t, d, o, h.

bin_num is a binary number formed of '0'-'1' ending with a 'B', 'b', 'Y' or 'y'.

Examples: `1001B; 1001Y; 01100100b;`

dec_num is a decimal number formed of '0'-'9', optionally followed by the letter 'T', 't', 'D' or 'd'.

Examples: `12; 5978D; 192837465T;`

oct_num is an octal number formed of '0'-'7' ending with an 'O' or 'o'.

Examples: `11O; 447o; 30146O`

hex_num is a hexadecimal number formed of the characters '0'-'9' and 'a'-'f' or 'A'-'F' ending with a 'H' or 'h' or prefixed with '0X' or '0x'. The first character must be a decimal digit, so it may be necessary to prefix a hexadecimal number with the '0' character.

Examples: `45H; 0FFD4h; 0x9abc`

5.2.3 EXPRESSION STRING

An *expression_string* is a *string* with a length of 0, 1 or 2 bytes evaluating to a number. The value of the string is calculated by putting the last character (if any) in the least significant byte of a word and the second last character (if any) in the most significant byte of the word.

string is a string of ASCII characters, enclosed in single (') or double (") quotes. The starting and closing quote must be the same. To include the enclosing quote in the string, double it. E.g. the string containing both quotes can be denoted as: "'""" or '''"'.

In strings with double quotes you can also use C-escape sequence characters, which are preceded by a '\' backslash. A complete list of C-escape sequence characters is given below.

Examples:

```
'A' + 1    ; a 1-byte ASCII string, result 42H
"9C" + 1   ; a 2-byte ASCII string, result 3944H
```

List of C-escape sequence characters (double quotes only):

\a	alert (bell) character	\\	backslash
\b	backspace	\?	question mark
\f	formfeed	\'	single quote
\n	newline	\"	double quote
\r	carriage return	*ooo*	octal number
\t	horizontal tab	\x*hh*	hexadecimal number
\v	vertical tab		

where, *ooo* is one to three octal digits
hh is one or more hexadecimal digits.

"\\" ; use this for a single backslash ! (double quotes)

'\' ; or this (single quotes)

5.2.4 SYMBOL

A *symbol* is an *identifier*. A *symbol* represents the value of an *identifier* which is already defined, or will be defined in the current source module by means of a label declaration, equate directive or the EXTRN directive. Symbols result in relocatable expressions.

Examples:

```
CON1 EQU 3H                ; The variable CON1 represents
                           ; the value of 3

MOV R1, CON1 + 0FFD3H      ; Move contents of address
                           ; 0FFD7H to register R1
```

5.3 OPERATORS

There are two types of operators:

- unary operators
- binary operators

Operators can be arithmetic operators, relational operators, logical operators, attribute overriding operators or attribute value operators. All operators are described in the following sections.

If the grouping of the operators is not specified with parentheses, the operator precedence is used to determine evaluation order. Every operator has a precedence level associated with it. The following table lists the operators and their order of precedence (in descending order).

Operators	Type
. (dot operator)	binary
BIT PTR, BYTE PTR, WORD PTR, NEAR PTR, FAR PTR, DPP0:, DPP1:, DPP2:, DPP3:, DATA3, DATA4, DATA8, DATA16, SEG, PAG, SOF, POF, BOF	unary
HIGH, LOW, NOT, !, ~, +, –	unary
*, /, MOD, %	binary
+, –	binary
SHL, <<, SHR, >>	binary
LT, <, LE, <=, GT, >, GE, >=, ULT, ULE, UGT, UGE	binary

Operators	Type
EQ, ==, NE, !=	binary
AND, &	binary
XOR, ^	binary
OR, |	binary
SHORT	unary

Table 5-5: Operators Precedence List

Except for the unary operators, the assembler evaluates expressions with operators of the same precedence level left-to-right. The unary operators are evaluated right-to-left. So, `-4 + 3 * 2` evaluates to `(-4) + (3 * 2)`. With the SHORT operator no multiple operators are allowed.
Note that you can also use the '**.**' operator in expressions (for bit selection in a byte)!

5.3.1 ARITHMETIC OPERATORS

5.3.1.1 ADDITION AND SUBTRACTION

Synopsis:

Addition: *operand* **+** *operand*

Subtraction: *operand* **-** *operand*

The + operator adds its two operands and the - operator subtracts them. The operands can be any expression evaluating to an absolute number or a relocatable operand.

Examples:

```
0a342h  + 23h       ; addition of absolute numbers
0ff1ah  - AVAR      ; subtraction with a variable
```

5.3.1.2 SIGN OPERATORS

Synopsis:

Plus: **+***operand*
Minus: **–***operand*

The + operator does not modify its operand. The - operator subtracts its operand from zero.

Example:

```
5  +  -3  ; result is 2
```

5.3.1.3 MULTIPLICATION AND DIVISION

Synopsis:

Multiplication:	*operand*	*****	*operand*
Division:	*operand*	/	*operand*
Modulo:	*operand*	**%**	*operand*
	operand	**MOD**	*operand*

The * operator multiplies its two operands, the / operator performs an integer division, discarding any remainder. The MOD and % operators also perform an integer division, but discard the quotient and return the remainder. The operands can be any expression evaluating to an absolute number or a relocatable operand.

Examples:

```
AVAR  *   2          ; multiplication
0ff3ch /  COUNT      ; division
23    mod 4          ; modulo, result is 3
```

5.3.1.4 SHIFT OPERATORS

Synopsis:

Shift left:	*operand*	**<<**	*count*
	operand	**SHL**	*count*
Shift right:	*operand*	**>>**	*count*
	operand	**SHR**	*count*

These operators shift their left operand (*operand*) either left (SHL, <<) or right (SHR, >>) by the number of bits (absolute number) specified with the right operand (*count*). The operands can be any expression evaluating to an absolute number or a relocatable operand.

Examples:

```
R0   <<   2    ; shift left register R0, 2 times
AVAR shr  COUNT; shift right variable AVAR,
               ; COUNT times
```

5.3.1.5 RELATIONAL OPERATORS

Synopsis:

Equal:	*operand*	**EQ**	*operand*
	operand	**==**	*operand*
Not equal:	*operand*	**NE**	*operand*
	operand	**!=**	*operand*
Less than:	*operand*	**LT**	*operand*
	operand	**<**	*operand*
Less than or equal:	*operand*	**LE**	*operand*
	operand	**<=**	*operand*
Greater than:	*operand*	**GT**	*operand*
	operand	**>**	*operand*
Greater than or equal:	*operand*	**GE**	*operand*
	operand	**>=**	*operand*
Unsigned less than:	*operand*	**ULT**	*operand*
Unsigned less than or equal:	*operand*	**ULE**	*operand*
Unsigned greater than:	*operand*	**UGT**	*operand*
Unsigned greater than or equal:	*operand*	**UGE**	*operand*

These operators compare their operands and return an absolute number (data16) of 1's for 'true' and 0's for 'false'. The operands can be any expression evaluating to an absolute number or a relocatable operand.

Examples:

```
3 GE 4          ; result is 0 (false)
4 EQ COUNT      ; 1's (true), if COUNT is 4.
                ; 0 otherwise.
9 ULT0Ah        ; result is 1's (true)
```

5.3.1.6 LOGICAL OPERATOR

Synopsis:

Logical NOT: **!** *operand*

The **!** operator performs a logical not on its *operand*. **!** returns 1 ('true') if the *operand* is 0, otherwise **!** returns 0 ('false').

Examples:

```
! 0Ah           ; result is 0 (false)
! ( 4 < 3 )     ; result is 1 (true).
                ; 4 < 3 result is 0 (false).
```

5.3.1.7 BITWISE OPERATORS

Synopsis:

Bitwise AND:	*operand*	**AND**	*operand*
	operand	**&**	*operand*
Bitwise OR:	*operand*	**OR**	*operand*
	operand	**|**	*operand*
Bitwise XOR:	*operand*	**XOR**	*operand*
	operand	**^**	*operand*
Bitwise NOT:		**NOT**	*operand*
		~	*operand*

The AND, OR and XOR operators take the bit-wise AND, OR respectively XOR of the left and right operand. The NOT operator performs a bit-wise complement on its operand. The operands can be any expression evaluating to an absolute number or a relocatable operand.

Examples:

```
0Bh  and  3     ; result is 3
                     1011b
                     0011b  and
                     0011b

NOT  0Ah        ; result is 5
                     not 1010b = 0101b
```

5.3.1.8 SELECTION OPERATORS

Synopsis:

Select high: **HIGH** *operand*
Select low: **LOW** *operand*

LOW selects the least significant byte of its operand, HIGH selects the most significant byte.

Examples:

```
DB  HIGH  1234H; stores 0012H
DB  LOW   1234H; stores 0034H
```

5.3.1.9 DOT OPERATOR

Synopsis:

bitword.*bitpos*

The `.` (dot) operator singles out the bit number specified by the *bitpos* from the *bitword*. The result is an address in the BIT addressable memory space.

bitword can have the following absolute values:

00h	..	7fh	(8-bit word offset in RAM)
80h	..	0efh	(8-bit word offset in SFR)
0fd00h	..	0fdfeh	(internal RAM)
0ff00h	..	0ffdeh	(internal SFR)

bitpos can have the following values:

00h .. 0fh

The assembler internally uses the 8-bit word offset for bit addresses. An expression like 0fd10h.2 is evaluated by first converting 0fd10h to the corresponding 8-bit word offset 08h. This conversion is made because the 8-bit word offset for RAM and SFR areas are contiguous, while the corresponding 16-bit addresses are not.

The distinction between RAM area and SFR area is made because the acceptance of both (RAM area and SFR area) in 'DOT" expressions depends on the context in which they are used.

For example: the bitword of a 'DOT" expression used in the operand of the BIT directive must be in internal RAM.

The 8-bit word offset in SFR is not allowed when the EXTSFR control is active.
When EXTSFR is active an internal SFR address also can be an address in the range 0f00h ... 0f1deh.

Examples:

```
BITW      SECTION  DATA  BITADDRESSABLE
BITWRD    DS 2
BITW      ENDS

25.3           ; absolute bitwordnumber.bitposition
0FD20H.4       ; absolute bitwordaddress.bitposition
BITWRD.2       ; relative bitwordoffset.bitposition

BITWRD + 4.ST1 - 3       ; Illegal address operation!!
(BITWRD + 4).(ST1 - 3)   ; expression.expression
0FD00H.0 + 21H           ; results in: 0FD02H.1
```

5.3.2 ATTRIBUTE OVERRIDING OPERATORS

5.3.2.1 PAGE OVERRIDE OPERATOR

Synopsis:

DPP*n*:*var-name*

The physical page in which a variable lies is defined by the page number in one of the Data Page Pointer (DPP) registers. Access to a variable is established by the page number and a page offset. The page override operator is used to override or specify the page attribute of a variable. In other words, the operator can specify what the contents of the DPP registers is at run time. The page override is similar to the ASSUME directive (described in the chapter *Assembler Directives*), but here the override for a reference to a variable or label must be explicitly coded!

DPP*n* can be any of the Data Page Pointer registers: DPP0, DPP1, DPP2, DPP3. The *var-name* can be a variable name or label name or an address expression including a variable name or label name.

The DPP: operator is only allowed in the segmented mode.

Example:

```
ASSUME      DPP0:DSEC1

DSEC1 SECTION DATA
AWORD DW  0
WORDLBL     LABEL   WORD
DSEC1 ENDS

CSEC1 SECTION CODE
            .
            .
            MOV R0, AWORD           ; The ASSUME covers the
            .                       ; the reference
            .
            MOV DPP1, #DSEC1        ; Explicit code
            MOV R0, DPP1:AWORD      ; The page override operator
            MOV R1, DPP1:WORDLBL    ; covers the reference
            .
CSEC1 ENDS
```

5.3.2.2 PTR OPERATOR

Synopsis:

ptr-type [**PTR**] *operand*

Use the PTR operator to define a memory reference with a certain type. The PTR operator can also overwrite the type of the *operand*.

Ptr-type can be any of the following pointer types:

BIT, BYTE, WORD, BITWORD, NEAR, FAR

The *operand* can be any address expression which represents a variable or label.

Examples:

```
MOV [R1], BYTE PTR 100
```

is the same as

```
MOV [R1], 100
```

The PTR operator can also overwrite the type of the operand.

```
MOV RL0, BYTE PTR AWORD        ; get first byte
MOV RL1, BYTE PTR AWORD + 1    ; get second byte
```

A PTR operator can not be used on section, group or externally declared constants. A BYTE PTR operator cannot be used on system addresses. A BIT PTR operator can only by applied to bits, and a bit can only be prefixed by a BIT PTR.

5.3.2.3 DATA*N* OPERATOR

Synopsis:

DATA*n operand*

Use the DATA*n* operator to specify forward references to constants or to adjust the data type of the operand. There are four different DATAn operators, each within a defined range. *n* represents the number of bits:

Operator	Range
DATA3	0 – 7
DATA4	0 – 15
DATA8	0 – 255
DATA16	0 – 65535 or –32768 to + 32767

When the DATA*n* operator is properly used in immediate expressions, you can reduce the instruction code length. If no DATAn operator is used, the assembler extends the operand type to the type with the maximum width. The DATA operator can only be used to force a larger data type, not smaller (see the examples). If an invalid data type is specified in an instruction, an error occurs.

Examples:

```
CON1  EQU  9            ; type DATA4

CSEC  SECTION CODE
  MOV R0, #DATA4 CON2   ; 2 byte instruction, type DATA4
  MOV R2, #CON1         ; 2 byte instruction, type DATA4
  ADD R0, #DATA16 CON1 + 5 * CON2   ; type DATA16
  .
  MOV R3, #CON2         ; Warning: unknown type in Pass 1
  .                     ; (maybe forward reference): type DATA16
  .                     ; is assumed to enable instruction length
  MOV R2, #DATA4 CON3   ; Error: data type of the result
  .                     ; is larger than the type
  .                     ; determined with the DATA operator
CSEC  ENDS

CON2  EQU  9            ; type DATA4
CON3  EQU  1234         ; type DATA16
```

5.3.2.4 SHORT OPERATOR

Synopsis:

SHORT *label*

The SHORT operator is used to generate a short distance jump (relative jump within -128 to +127 words at the instruction) to a forward referenced label. The operator can only be used in jump instructions where a two byte JMP shall be coded (JMPR relative jump). The *label* can only be a NEAR label, addressable through the same CSP. When the OPTIMIZE control is in effect, **a166** performs optimizations for jump instructions whenever possible. In pass 2 the assembler determines if the distance between the instruction and the label can fit in a short distance jump. If the SHORT operator is used when OPTIMIZE is in effect, **a166** reports an error if the optimization is not possible. If the assembler control NOOPTIMIZE is used, the SHORT operator performs the optimization.

Example:

```
CSEC SECTION   CODE
     JMP  LAB       ; 2 byte instruction, optimized
     .              ; by the assembler
     JMP  SHORT LAB ; 2 byte instruction
     .
LAB: MOV R0, #14
CSEC ENDS
```

5.3.3 ATTRIBUTE VALUE OPERATORS

The attribute value operators return the numerical value (a part of the physical address) of the attribute of an operand. The attribute of the operand is not changed by the operators. These operators are useful when you explicitly need to know the memory location or memory offset of a variable, label, section or group name.

5.3.3.1 SEG OPERATOR

Synopsis:

SEG *operand*

This operator returns an 8-bit relocatable segment number of the named symbol (variable-, label-, section-, group name, SFR and PEC pointer). If the operator is used with system names, the returned value is not a relocatable number, it returns segment number 0.

Examples:

```
DSEC SECTION DATA
AWORDDW SEG TABX          ; Initialize with the segment
                          ; number where TABX is located.
TABX DS 0
TABY DS 20
DSEC ENDS

CSEC SECTION CODE
     MOV R0, #SEG TABY    ; Init R0 with the segment
     .                    ; number where TABY is located
     JMPS SEG TABY, LAB1  ; jump to segment where
     .                    ; TABY is located
LAB1:.
CSEC ENDS
```

5.3.3.2 PAG OPERATOR

Synopsis:

PAG *operand*

This operator returns a 10-bit relocatable page number of a symbol (variable-, label-, section- or register bank name). If this operator is used with system names, it returns an absolute page number.

Examples:

```
DSEC SECTION DATA
AWORDDW   PAG COUNT       ; Initialize with the page
                          ; number of the variable count.
DSEC ENDS

CSEC SECTION CODE
     MOV DPP0, #PAG COUNT      ; Init DPP0 with count's
                               ; section
CSEC ENDS
```

5.3.3.3 SOF OPERATOR

Synopsis:

SOF *operand*

This operator returns a 16-bit segment offset of a variable, label, section or register bank from the base of the segment in which it is defined. Group names cannot be used as operands for an offset, because at assembly time the start offset of an absolute group cannot be determined for every situation, as the order of the section inside the group can be changed with the **l166** locator.

Examples:

```
DSEC SECTION DATA
     AWORDDW SOF TAB2     ; Init with the segment-
                          ; offset of variable TAB2.
     TAB2 DW 8
DSEC ENDS

CSEC SECTION CODE
     MOV R0, #SOF TAB2    ; Fill R0 with the segment-
                          ; offset of variable TAB2.
CSEC ENDS
```

5.3.3.4 POF OPERATOR

Synopsis:

POF *operand*

This operator returns a relocatable 14-bit page offset of a variable, label, section or register bank from the base of the page in which it is defined. Group names cannot be used as operands for an offset, because at assembly time the start offset of an absolute group cannot be determined for every situation, as the order of the section inside the group can be changed with the **l166** locator.

Examples:

```
DSEC SECTION DATA
     AWORDDW POF TAB2     ; Init with the page-offset
                          ; of variable TAB2.
     TAB2 DW 8
DSEC ENDS

CSEC SECTION CODE
     MOV R0, #POF TAB2    ; Fill R0 with the page-
                          ; offset of variable TAB2.
CSEC ENDS
```

5.3.3.5 BOF OPERATOR

Synopsis:

BOF *bit-var*

This operator returns the bit position of a bit variable, in the word in which it is defined. This is not a relocatable number. The BOF operator can only be used on bit variables.

Examples:

```
EXTERN EBIT:BIT

DSEC  SECTION DATA BITADDRESSABLE
BW    DS   8
BWX   BIT  BW.9
DSEC  ENDS

BSEC  SECTION BIT  AT 0FD00.4H
BN    DBIT
BSEC  ENDS

CSEC  SECTION CODE
      ROL R2, #BOF EBIT       ; Rotate R2 as many times to the
                              ; left as the number of the bit-
                              ; position of variable EBIT
      ROL R4, #BOF BN         ; Rotate left 4 times
      ROL R5, #BOF BWX        ; Rotate left 9 times
CSEC  ENDS
```

5.4 SFR AND BIT NAMES

Built into the assembler are a number of symbol definitions for various C166/ST10 addresses in bit, data and code memory space. These symbols are special function register and bit names. The symbols are listed below. They are ordered by address.

5.4.1 SPECIAL FUNCTION REGISTERS (SFR)

SFRs are subdivided in Non Bit- and Bit-addressable SFRs.

- Non Bit Addressable SFRs are placed between address F000h and FEFFh in the first segment.

Name	Physical address	Name	Physical address
QX0	F000h *	MDH	FE0Ch
QX1	F002h *	MDL	FE0Eh
QR0	F004h *	CP	FE10h
QR1	F006h *	SP	FE12h
DPP0	FE00h	STKOV	FE14h
DPP1	FE02h	STKUN	FE16h
DPP2	FE04h	MAH	FE5Eh *
DPP3	FE06h	MAL	FE5Ch *
CSP	FE08h		

Table 5-6: Non Bit Addressable SFRs

* = Only available for EXTMAC or EXTEND2 architectures

- Bit Addressable SFRs are placed between address FF00h and FFDFh

Name	Physical address
IDX0	FF08h *
IDX1	FF0Ah *
MDC	FF0Eh
PSW	FF10h
ZEROS	FF1Ch
ONES	FF1Eh
MRW	FFDAh *
MCW	FFDCh *
MSW	FFDEh *

Table 5-7: Bit Addressable SFRs

5.4.2 BIT NAMES

The addresses in the following tables are bit addresses in the form BITADDR.BITPOS. BITADDR is the address of one of the SFR registers where the bit is part of. BITPOS is the bit position in the SFR register.

Name	Physical address
N	FF10h.0
C	FF10h.1
V	FF10h.2
Z	FF10h.3
E	FF10h.4
MULIP	FF10h.5
USR0	FF10h.6
USR1	FF10h.7 *
HLDEN	FF10h.A
IEN	FF10h.B

Table 5-8: Bit Names

* = Only available for EXTEND2 architectures

CHAPTER 6

ASSEMBLER CONTROLS

TASKING

9 CHAPTER

6.1 INTRODUCTION

Assembler controls are provided to alter the default behavior of the assembler. They can be specified on the command line or on control lines, embedded in the source file. A control line is a line with a dollar sign (**$**) on the first position. Such a line is not processed like a normal assembly source line, but as an assembler control line. Only one control per source line is allowed. An assembler control line may contain comments.

The controls are classified as: primary or general.

Primary controls affect the overall behavior of the assembler and remain in effect throughout the assembly. For this reason, primary controls may only be used on the invocation line or at the beginning of a source file, before the assembly starts. If you specify a primary control more than once, a warning message is given and the last definition is used. This enables you to override primary controls via the invocation line.

General controls are used to control the assembler during assembly. Control lines containing general controls may appear anywhere in a source file and are also allowed in the invocation. When you specify general controls via the invocation line the corresponding general controls in the source file are ignored.

The controls GEN, NOGEN, GENONLY and INCLUDE are implemented in the macro preprocessor. If one of these controls is encountered, the assembler generates a warning.

The examples in this chapter are given for a PC environment.

An overview of all assembler controls is listed in the next section.

6.2 OVERVIEW A166 CONTROLS

Control	Abbr.	Type	Def.	Description
ABSOLUTE NOABSOLUTE	AB NOAB	pri	 NOAB	Generate absolute code. Do not generate absolute code.
ASMLINEINFO NOASMLINEINFO	A NOA	gen	 NOA	Generate line and file info. Do not generate line and file info.
CASE NOCASE	CA NOCA	pri	 NOCA	All user names are case sensitive. User names are not case sensitive.
CHECK*cpupr* NOCHECK*cpupr*	*cpupr* NO*cpupr*	gen	 NO...	Check or do not check for CPU functional problem. See table 6-2 for a complete list.
DATE('*date*')	DA	pri	system date	Set date in header of list file.
DEBUG NODEBUG	DB NODB	pri	 NODB	Produce symbolic debug information. Do not produce symbolic debug info.
EJECT	EJ	gen		Generate formfeed in list file.
ERRORPRINT [(*err-file*)] NOERRORPRINT	EP NOEP	pri	 NOEP	Print errors to named file. No error printing.
EXPANDREGBANK NOEXPANDREGBANK	XRB NOXRB	pri	XRB	Prevent (enable) automatic expansion of register banks.
EXTEND EXTEND1 EXTEND2 EXTEND22 EXTMAC	EX EX1 EX2 EX22 XC	pri	EX	Use all extensions of the C166ST10 Use C166S v1.0 extensions. Use XC16x/Super10 instruction set. Use XC16x/Super10 extensions. Use MAC instruction set.
EXTPEC16 NOEXTPEC16	EP16 NOEP16	pri	 NOEP16	Enables use of PECC8 to PECC15. Disables use of PECC8 to PECC15.
FLOAT(*float-type*) *float-type*: NONE, SINGLE, ANSI	FL	gen	NONE	Place *float-type* in object file.
GEN GENONLY NOGEN	GE GO NOGE	gen	GE	Implemented with macro preprocessor[1] Implemented with macro preprocessor[1] Implemented with macro preprocessor[1]
GSO	GSO	pri		Enable global storage optimizer.
HEADER NOHEADER	HD NOHD	pri	 NOHD	Print list file header page. Do not print list file header page.

Abbr.: Abbreviation of the control.
Type: Type of control: pri for primary controls, gen for general controls.
Def.: Default.
[1] This control is only implemented for compatibility, the assembler will generate a warning on level 2.

Control	Abbr.	Type	Def.	Description
INCLUDE(*inc-file*)	IC	gen		Implemented with macro preprocessor[1]
LINES NOLINES	LN NOLN	gen	LN	Keep line number information. Remove line number information.
LIST NOLIST	LI NOLI	gen	LI	Resume listing. Stop listing.
LISTALL NOLISTALL	LA NOLA	pri	 NOLA	List in every pass. Do not list in every pass.
LOCALS NOLOCALS	LC NOLC	gen	LC	Keep local symbol information. Remove local symbol information.
MISRAC(*string*)	MC	pri		Set MISRA C check list.
MOD166 NOMOD166	M166 NOM166	pri	M166	Has no effect. May be removed in a future version
MODEL(*modelname*) *modelname*: NONE, TINY, SMALL, MEDIUM, LARGE or HUGE	MD	pri	NONE	Indicate C compiler memory model.
OBJECT[(*file*)] NOOBJECT	OJ NOOJ	pri	*src*.obj	Alternative name for object file. Do not produce an object file.
OPTIMIZE NOOPTIMIZE	OP NOOP	gen	OP	Turn optimization on. Turn optimization off.
PAGELENGTH(*length*)	PL	pri	60	Set list page length.
PAGEWIDTH(*width*)	PW	pri	120	Set list page width.
PAGING NOPAGING	PA NOPA	pri	PA	Format print file into pages. Do not format print file into pages.
PEC NOPEC	PC NOPC	gen	PEC	
PRINT[(*print-file*)] NOPRINT	PR NOPR	pri	*src*.lst	Define print file name. Do not create a print file.
RESTORE SAVE	RE SA	gen		Restore saved listing control. Save listing control.
RETCHECK NORETCHECK	RC NORC	gen	RC	Check on correct RET instruction. No check on correct RET instruction.

Abbr.: Abbreviation of the control.
Type: Type of control: pri for primary controls, gen for general controls.
Def.: Default.
[1] This control is only implemented for compatibility, the assembler will generate a warning on level 2.

Control	Abbr.	Type	Def.	Description
SEGMENTED NONSEGMENTED	SG NOSG	pri	 NOSG	Segmented memory model. Non segmented memory mode.
STDNAMES(*std-file*)	SN	pri		Read user defined system names.
STRICTTASK NOSTRICTTASK	ST NOST	pri	 NOST	Assemble strictly with Task Concept. Allow all extensions on Task Concept.
SYMB NOSYMB	SM NOSM	gen	SM	Keep ?SYMB symbols. Remove ?SYMB symbols.
SYMBOLS NOSYMBOLS	SB NOSB	pri	 NOSB	Print symbol table in list file Do not print symbol table in list file
TABS(*number*)	TA	pri	8	Set list tab width.
TITLE('*title*')	TT	gen	*module*	Set list page header title.
TYPE NOTYPE	TY NOTY	pri	TY	Produce type records in object file. Do not produce type records.
WARNING(*number*) NOWARNING(*number*)	WA NOWA	gen	1	Set warning level or enable warning. Disable warning.
WARNINGASERROR NOWARNINGASERROR	WAE NOWAE	gen	 NOWAE	Exit with an exit status. Unequal 0 if there were warnings
XREF NOXREF	XR NOXR	pri	 NOXR	Generate cross-reference Do not generate cross-reference

Abbr.: Abbreviation of the control.
Type: Type of control: pri for primary controls, gen for general controls.
Def.: Default.
[1] This control is only implemented for compatibility, the assembler will generate a warning on level 2.

*Table 6-1: **a166** controls*

Control	Abbreviation	Description
CHECKBUS18 NOCHECKBUS18	BUS18 NO...	Check for BUS.18 problem. Do not check for BUS.18 problem.
CHECKC166SV1DIV NOCHECKC166SV1DIV	C166SV1DIV NO...	Check for CR105893 problem. Do not check for CR105893 problem.
CHECKC166SV1DIVMDL NOCHECKC166SV1DIVMDL	C166SV1DIVMDL NO...	Check for CR108309 problem. Do not check for CR108309 problem.
CHECKC166SV1DPRAM NOCHECKC166SV1DPRAM	C166SV1DPRAM NO...	Check for CR105981 problem. Do not check for CR105981 problem.

Control	Abbreviation	Description
CHECKC166SV1EXTSEQ NOCHECKC166SV1EXTSEQ	C166SV1EXTSEQ NO...	Check for CR107092 problem. Do not check for CR107092 problem.
CHECKC166SV1MULDIVMDLH NOCHECKC166SV1MULDIVMDLH	C166SV1MULDIVMDLH NO...	Check for CR108904 problem. Do not check for CR108904 problem.
CHECKC166SV1PHANTOMINT NOCHECKC166SV1PHANTOMINT	C166SV1PHANTOMINT NO...	Check for CR105619 problem. Do not check for CR105619 problem.
CHECKC166SV1SCXT NOCHECKC166SV1SCXT	C166SV1SCXT NO...	Check for CR108219 problem. Do not check for CR108219 problem.
CHECKCPU3 NOCHECKCPU3	CPU3 NO...	Check for CPU.3 problem. Do not check for CPU.3 problem.
CHECKCPU16 NOCHECKCPU16	CPU16 NO...	Check for CPU.16 problem. Do not check for CPU.16 problem.
CHECKCPU1R006 NOCHECKCPU1R006	CPU1R006 NO...	Check for CPU1R006 problem. Do not check for CPU1R006 problem.
CHECKCPU21 NOCHECKCPU21	CPU21 NO...	Check for CPU.21 problem. Do not check for CPU.21 problem.
CHECKCPUJMPRACACHE NOCHECKCPUJMPRACACHE	CPUJMPRACACHE NO...	Check for CR108400 problem. Do not check for CR108400 problem.
CHECKCPURETIINT NOCHECKCPURETIINT	CPURETIINT NO...	Check for CR108342 problem. Do not check for CR108342 problem.
CHECKCPURETPEXT NOCHECKCPURETPEXT	CPURETPEXT NO...	Check for CR108361 problem. Do not check for CR108361 problem.
CHECKLONDON1 NOCHECKLONDON1	LONDON1 NO...	Check for LONDON.1 problem Do not check for LONDON.1 problem.
CHECKLONDON1751 NOCHECKLONDON1751	LONDON1751 NO...	Check for LONDON.1751 problem Do not check for LONDON.1751 problem.
CHECKLONDONRETP NOCHECKLONDONRETP	LONDONRETP NO...	Check for LONDON.RETP problem Do not check for LONDON.RETP problem.
CHECKMULDIV NOCHECKMULDIV	MULDIV NO...	Check for unprotected MUL/DIV Do not check for unprotected MUL/DIV.

Control	Abbreviation	Description
CHECKPECCP NOCHECKPECCP	PECCP NO...	Check for the PEC interrupt problem.
CHECKSTBUS1 NOCHECKSTBUS1	STBUS1 NO...	Check for ST_BUS.1 problem. Do not check for ST_BUS.1 problem.

*Table 6-2: **a166** CPU functional problem controls*

On the next pages, the available assembler controls are listed in alphabetic order.

With controls that can be set from within EDE, you will find a mouse icon that describes the corresponding action.

6.3 DESCRIPTION OF A166 CONTROLS

ABSOLUTE

Control:

ABSOLUTE / NOABSOLUTE

Abbreviation:

AB / NOAB

Class:

Primary

Default:

NOABSOLUTE

Description:

ABSOLUTE generates absolute object code that can be loaded into memory without linking or locating. When using ABSOLUTE, all sections must be defined with the combine type 'AT address'. NOABSOLUTE generates relocatable object code, which has to be linked and located by **l166**.

Example:

```
a166 x.src ab   ; generate absolute object code
```

ASMLINEINFO

Control:

From the **Project** menu, select **Project Options...**
Expand the **Assembler** entry and select **Miscellaneous**.
Enable the **Generate HLL assembly debug information** check box.

ASMLINEINFO / NOASMLINEINFO

Abbreviation:

AL / NOAL

Class:

General

Default:

NOASMLINEINFO

Description:

The ASMLINEINFO control forces the assembler to generate line and file symbolic debugging information for each instruction. The '#line' directive (described in the next chapter) is used to keep track of which file and which line is being assembled.

As long as ASMLINEINFO is in effect, ?LINE and ?FILE symbols are disregarded. The assembler generates warning 164 if these directives are encountered while this control is in effect.

The ASMLINEINFO control is completely seperate from the SYMB and LINES controls, which regulate the translation of compiler generated symbolic debug information. With NOLINES and ASMLINEINFO, all line number information will be derived from the assembly source file. The DEBUG control regulates the effect of ASMLINEINFO in general. See the DEBUG control's description for a list of effected controls.

Example:

```
$ASMLINEINFO
   ;generate line and file debug information
   MOV R0, R12
$NOASMLINEINFO
   ;stop generating line and file information
```

CASE

Control:

From the **Project** menu, select **Project Options...**
Expand the **Assembler** entry and select **Miscellaneous**.
Enable the **Operate in case sensitive mode** check box.

CASE / NOCASE

Abbreviation:

CA / NOCA

Class:

Primary

Default:

NOCASE

Description:

Selects whether the assembler operates in case sensitive mode or not. In case insensitive mode the assembler maps characters on input to uppercase (literal strings excluded).

Example:

```
a166 x.src case   ; a166 in case sensitive mode
```

CHECKBUS18

Control:

From the **Project** menu, select **Project Options...**
Expand the **Application** entry, expand the **Processor** entry and select **CPU Problem Bypasses and Checks**. Enable the **BUS.18 -- JMPR at jump target address** check box.

CHECKBUS18 / NOCHECKBUS18

Abbreviation:

BUS18 / NOBUS18

Class:

General

Default:

NOCHECKBUS18

Description:

Infineon regularly publishes microcontroller errata sheets for reporting CPU functional problems. With the CHECKBUS18 control the assembler issues warning 153 when the BUS.18 problem is present on your CPU.

BUS.18: Possible conflict between jump chaining and PEC transfers.

Please refer to the Infineon errata sheets for a description of the BUS.18 problem. See also the description of warning W 153.

Example:

```
$checkbus18   ; check for BUS.18 problem
```

CHECKC166SV1DIV

Control:

From the **Project** menu, select **Project Options...**
Expand the **Application** entry, expand the **Processor** entry and select **CPU Problem Bypasses and Checks**. Enable the **CR105893 -- Interrupted division corrupted by division in interrupt service routine** check box.

CHECKC166SV1DIV / NOCHECKC166SV1DIV

Abbreviation:

C166SV1DIV / NOC166SV1DIV

Class:

General

Default:

NOCHECKC166SV1DIV

Description:

Several processor steppings of the C166S v1 architecture have a problem with interrupted divisions. The internal Infineon reference for this problem is CR105893: 'Interrupted division corrupted by division in interrupt service routine'. The assembler generates a warning if an unprotected DIV is found. Protect these DIV instructions with appropiate atomic and extended sequences to prevent interrupts.

Please refer to the Infineon errata sheets for a description of the CR105893 problem.

Example:

```
$CHECKC166SV1DIV  ; check for CR105893 'Interrupted DIV'
```

CHECKC166SV1DIVMDL

Control:

From the **Project** menu, select **Project Options...**
Expand the **Application** entry, expand the **Processor** entry and select **CPU Problem Bypasses and Checks**. Enable the **CR108309 -- MDL access immediately after a DIV causes wrong PSW values** check box.

CHECKC166SV1DIVMDL / NOCHECKC166SV1DIVMDL

Abbreviation:

C166SV1DIVMDL / NOC166SV1DIVMDL

Class:

General

Default:

NOCHECKC166SV1DIVMDL

Description:

The C166S v1.0 processor architecture has a problem whereby PSW is set with wrong values if MDL is accessed immediately after a DIV instruction. The CHECKC166SV1DIVMDL control causes the assembler to issue a warning when an instruction after a DIV, DIVL, DIVU or DIVLU instruction accesses MDL.

Please refer to the Infineon errata sheets for a description of the CR108309 problem.

Example:

```
$CHECKC166SV1DIVMDL     ; check for MDL accesses
                        ; after a DIV
```

CHECKC166SV1DPRAM

Control:

From the **Project** menu, select **Project Options...**
Expand the **Application** entry, expand the **Processor** entry and select **CPU Problem Bypasses and Checks**. Enable the **CR105981 –- JBC and JNBS with op1 a DPRAM operand (bit addressable) do not work** check box.

CHECKC166SV1DPRAM / NOCHECKC166SV1DPRAM

Abbreviation:

C166SV1DPRAM / NOC166SV1DPRAM

Class:

General

Default:

NOCHECKC166SV1DPRAM

Description:

Several processor steppings of the C166S v1.0 architecture have a problem with JBC and JNBS testing on a DPRAM address. The internal Infineon reference for this problem is CR105981: 'JBC and JNBS with op1 a DPRAM operand do not work'.

JBC and JNBS with a DPRAM operand as first operand do not work properly. The DPRAM address is written back with incorrect data. This happens even when the jump is not taken.

With the CHECKC166SV1DPRAM control, the assembler issues an error if it finds a JBC/JNBS operand in the DPRAM range. Relocatable values are also considered to be in this area.

The compiler has a workaround for the CR105981 problem by using a jump inside an ATOMIC sequence. With the CHECKC166SV1DPRAM control, the assembler accepts this compiler workaround silently and issues no warning.

Please refer to the Infineon errata sheets for a description of the CR105981 problem.

Examples:

```
$NOCHECKC166SV1DPRAM    ; do not check for DPRAM problems
JBC 0fd40h.1, _label    ; allow JBC without error
$CHECKC166SV1DPRAM      ; check for DPRAM problems again
```

CHECKC166SV1EXTSEQ

Control:

From the **Project** menu, select **Project Options...**
Expand the **Application** entry, expand the **Processor** entry and select **CPU Problem Bypasses and Checks**. Enable the **CR107092 -- Extended sequences not properly handled with conditional jumps** check box.

CHECKC166SV1EXTSEQ / NOCHECKC166SV1EXTSEQ

Abbreviation:

C166SV1EXTSEQ / NOC166SV1EXTSEQ

Class:

General

Default:

NOCHECKC166SV1EXTSEQ

Description:

Several processor steppings of the C166S v1.0 architecture have a problem with conditional jumps in extend sequences. The internal Infineon reference for this problem is CR107092: 'Extended sequences not properly handled with conditional jumps'.

Affected are the EXTR, EXTP, EXTPR, EXTS, EXTSR and ATOMIC instructions. If a conditional jump or call occurs in a range defined by these instructions, the range length is extended.

With the CHECKC166SV1EXTSEQ control, the assembler issues an error if it finds a conditional jump inside an extend sequence.

Please refer to the Infineon errata sheets for a description of the CR107092 problem.

Examples:

```
$NOCHECKC166SV1EXTSEQ    ; do not check for conditional
                         ; jumps in extend sequence
```

CHECKC166SV1MULDIVMDLH

Control:

From the **Project** menu, select **Project Options...**
Expand the **Application** entry, expand the **Processor** entry and select **CPU Problem Bypasses and Checks**. Enable the **CR108904 -- DIV/MUL interrupted by PEC when the previous instruction writes in MDL/MDH** check box.

CHECKC166SV1MULDIVMDLH / NOCHECKC166SV1MULDIVMDLH

Abbreviation:

C166SV1MULDIVMDLH / NOC166SV1MULDIVMDLH

Class:

General

Default:

NOCHECKC166SV1MULDIVMDLH

Description:

The C166S v1.0 processor architecture has a problem whereby wrong values are written into the destination pointer when a DIV or MUL instruction is interrupted and the previous instruction modified MDL or MDH. The CHECKC166SV1MULDIVMDLH control causes the assembler to issue a warning when it finds an unprotected DIV, DIVL, DIVU, DIVLU, MUL or MULU instruction immediately after MDL or when MDH has been changed.

Please refer to the Infineon errata sheets for a description of the CR108904 problem.

Example:

```
$CHECKC166SV1MULDIVMDLH     ; check for MULs and DIVs
                            ; after an MDL/H modification
```

CHECKC166SV1PHANTOMINT

Control:

From the **Project** menu, select **Project Options...**
Expand the **Application** entry, expand the **Processor** entry and select **CPU Problem Bypasses and Checks**. Enable the **CR105619 -- Phantom interrupt occurs if Software Trap is cancelled** check box.

CHECKC166SV1PHANTOMINT / NOCHECKC166SV1PHANTOMINT

Abbreviation:

C166SV1PHANTOMINT / NOC166SV1PHANTOMINT

Class:

General

Default:

NOCHECKC166SV1PHANTOMINT

Description:

Several processor steppings of the C166S v1.0 architecture have a problem with software traps. The internal Infineon reference for this problem is CR105619: 'Phantom Interrupt'.

The last regularly executed interrupt is injected again if a software trap is cancelled and if at the same time a real interrupt occurs. The cancelled trap might be re-injected if its priority is high enough. The software trap is cancelled if:

- the previous instruction changes SP explicitly
- the previous instruction changes PSW explicitly or implicitly
- OCDS/hardware triggers are generated on the TRAP instruction.

With the CHECKC166SV1PHANTOMINT control the assembler generates errors if it finds TRAP operations directly preceded by SP or PSW modifying instructions. It also generates warnings on level 2 for cases where this problem could occur, for example at labels or after RETP or JBC instructions.

Please refer to the Infineon errata sheets for a description of the CR105619 problem.

Examples:

```
$CHECKC166SV1PHANTOMINT      ; Check for 'Phantom
                             ; Interrupt' problem
```

CHECKC166SV1SCXT

Control:

From the **Project** menu, select **Project Options...**
Expand the **Application** entry, expand the **Processor** entry and select **CPU Problem Bypasses and Checks**. Enable the **CR108219 -- Old value of SP used when second operand of SCXT points to SP (check only)** check box.

CHECKC166SV1SCXT / NOCHECKC166SV1SCXT

Abbreviation:

C166SV1SCXT / NOC166SV1SCXT

Class:

General

Default:

NOCHECKC166SV1SCXT

Description:

The C166S v1.0 processor architecture has a problem when the second operand of SCXT points to SP. In that case the new SP value rather than the old one is written to the first operand. With the CHECKC166SV1SCXT control the assembler generates an error if this problem occurs.

Please refer to the Infineon errata sheets for a description of the CR108219 problem.

Example:

```
$CHECKC166SV1SCXT     ; check for SCXT instructions
                      ; with SP as 2nd operand
```

CHECKCPU3

Control:

From the **Project** menu, select **Project Options...**
Expand the **Application** entry, expand the **Processor** entry and select **CPU Problem Bypasses and Checks**. Enable the **CPU.3 -- MOV(B) Rn,[Rm+#data16] as the last instruction in an extend sequence** check box.

CHECKCPU3 / NOCHECKCPU3

Abbreviation:

CPU3 / NOCPU3

Class:

General

Default:

NOCHECKCPU3

Description:

Infineon regularly publishes microcontroller errata sheets for reporting CPU functional problems.

Early steps of the extended architecture core have a problem with the MOV Rn, [Rm + #data16] instuction at the end of an EXTEND sequence (EXTP, EXTPR, EXTS or EXTSR). In this case, the DPP addressing mechanism is not bypassed and an invalid code access might occur.

With the CHECKCPU3 control the assembler issues a warning when this instruction is found at the end of EXTP, EXTPR, EXTS or EXTSR sequences.

Please refer to the Infineon errata sheets for a description of the CPU.3 problem.

Example:

```
$checkcpu3                    ; check for CPU.3 problem

a166 module.src CHECKCPU3     ; check for CPU.3 problem in
                              ; module.src
```

CHECKCPU16

Control:

From the **Project** menu, select **Project Options...**
Expand the **Application** entry, expand the **Processor** entry and select **CPU Problem Bypasses and Checks**. Enable the **CPU.16 -- MOVB [Rn],mem** check box.

CHECKCPU16 / NOCHECKCPU16

Abbreviation:

CPU16 / NOCPU16

Class:

General

Default:

NOCHECKCPU16

Description:

Infineon regularly publishes microcontroller errata sheets for reporting CPU functional problems. With the CHECKCPU16 control the assembler issues fatal error 420 when the CPU.16 problem is present on your CPU.

CPU.16: Data read access with MOVB [Rn],mem instruction to internal ROM/Flash/OTP.

Please refer to the Infineon errata sheets for a description of the CPU.16 problem.

Example:

```
$checkcpu16    ; check for CPU.16 problem
```

CHECKCPU1R006

Control:

From the **Project** menu, select **Project Options...**
Expand the **Application** entry, expand the **Processor** entry and select **CPU Problem Bypasses and Checks**. Enable the **CPU 1R006 -- CPU hangup with MOV(B) Rn,[Rm+#data16]** check box.

CHECKCPU1R006 / NOCHECKCPU1R006

Abbreviation:

CPU1R006 / NOCPU1R006

Class:

General

Default:

NOCHECKCPU1R006

Description:

Infineon regularly publishes microcontroller errata sheets for reporting CPU functional problems. With the CHECKCPU1R006 control, the assembler issues fatal error 422 when the CPU 1.006 problem is present on your CPU.

CPU 1.006: CPU hangs with MOV (B) Rn, [Rm+#data16] instruction when the source operand refers to program memory on C163-24D derivatives.

Please refer to the Infineon errata sheets for a description of the CPU 1.006 problem.

Example:

```
$CHECKCPU1R006    ; check for CPU 1.006 problem
```

CHECKCPU21

Control:

From the **Project** menu, select **Project Options...**
Expand the **Application** entry, expand the **Processor** entry and select **CPU Problem Bypasses and Checks**. Enable the **CPU.21 -- Incorrect result of BFLDL/BFLDH after a write to internal RAM** check box.

CHECKCPU21 / NOCHECKCPU21

Abbreviation:

CPU21 / NOCPU21

Class:

General

Default:

NOCHECKCPU21

Description:

Infineon regularly publishes microcontroller errata sheets for reporting CPU functional problems. With the CHECKCPU21 control the assembler checks for the CPU.21 silicon problem and issues warnings and errors:

- an error when the previous operation writes to a register (including post increment, pre increment, post decrement and pre decrement) whose 8 bit address equals the appropiate field in the BFLDx operation.
- a warning if the previous operation writes to a register and the BFLDx instruction has a relocatable value in the concerned field.
- a warning if the previous instruction uses indirect addressing or executes an implicit stack write a warning if the previous instruction writes to IRAM and the BFLDx field is relocatable or larger than 0xEF.
- a warning if the previous instruction writes to bit addressable IRAM (including writing to a register) and the BFLDx field is relocatable or smaller than 0xF0.
- a warning if the BFLDx instruction is not protected by ATOMIC, EXTR, EXTP, EXTPR, EXTS or EXTSR, which means a PEC transfer may occur just before the execution of BFLDx. If the NOPEC control is effective for this BFLDx instruction, no warning will be given.

- a warning after any PCALL, because such routines normally use the RETP instruction, which could cause a problem a warning after any RETP, because a BFLDx could follow directly, which could in turn cause a problem.

For places where a warning is generated, but where the programmer has manually checked that a problem will not occur, you can put NOCHECKCPU21 and CHECKCPU21 around the BFLDx instruction.

When you use CHECKCPU21 as command line control, it will not override the use of NOCHECKCPU21 in the source file itself and vice versa. This is contrary to what most other assembler controls do.

See also the PEC / NOPEC control.

Please refer to the Infineon errata sheets for a description of the CPU.21 problem.

Example:

```
$checkcpu21    ; check for CPU.21 problem
```

CHECKCPUJMPRACACHE

Control:

From the **Project** menu, select **Project Options...**
Expand the **Application** entry, expand the **Processor** entry and select **CPU Problem Bypasses and Checks**. Enable the **CR108400 –– Broken program flow after not taken JMPR/JMPA instruction** check box.

CHECKCPUJMPRACACHE / NOCHECKCPUJMPRACACHE

Abbreviation:

CPUJMPRACACHE / NOCPUJMPRACACHE

Class:

General

Default:

NOCHECKCPUJMPRACACHE

Description:

The C166S v1.0 processor architecture has a problem with the JMPR and JMPA instructions. Any instruction following a conditional JMPR or JMPA might be fetched wrongly from the jump cache. With the CHECKCPUJMPRACACHE control the assembler issues a warning when it finds a JMPR or JMPA instruction followed by an instruction that might cause this problem.

Please refer to the Infineon errata sheets for a description of the CR108400 problem.

Example:

```
$CHECKCPUJMPRACACHE  ; check for CPU_JMPRA_CACHE problem
```

CHECKCPURETIINT

Control:

From the **Project** menu, select **Project Options...**
Expand the **Application** entry, expand the **Processor** entry and select **CPU Problem Bypasses and Checks**. Enable the **CR108342 -- Lost interrupt while executing RETI instruction** check box.

CHECKCPURETIINT / NOCHECKCPURETIINT

Abbreviation:

CPURETIINT / NOCPURETIINT

Class:

General

Default:

NOCHECKCPURETIINT

Description:

The C166S v1.0 processor architecture has a problem with RETI instructions which are not protected by an atomic or extend sequence of size 3 or 4. In case of two interrupts the first one may be lost although it may have a higher priority. Furthermore, the program flow after the ISR may be corrupted. With the CHECKCPURETIINT control the assembler issues a warning when it finds insufficiently protected RETI instructions.

Please refer to the Infineon errata sheets for a description of the CR108342 problem.

Example:

```
$CHECKCPURETIINT    ; check for CPU_RETI_INT problem
```

CHECKCPURETPEXT

Control:

From the **Project** menu, select **Project Options...**
Expand the **Application** entry, expand the **Processor** entry and select **CPU Problem Bypasses and Checks**. Enable the **CR108361 -- Incorrect (E)SFR address calculated for RETP as last instruction in extend sequence (check only)** check box.

CHECKCPURETPEXT / NOCHECKCPURETPEXT

Abbreviation:

CPURETPEXT / NOCPURETPEXT

Class:

General

Default:

NOCPURETPEXT

Description:

The C166S v1.0 processor architecture has a problem with calculating the address of the operand of a RETP when that operand is an SFR or an ESFR and the RETP instruction is the last instruction of an extend sequence. With the CHECKCPURETPEXT control the assembler issues an error when this problem occurs.

Please refer to the Infineon errata sheets for a description of the CR108361 problem.

Example:

```
$CHECKCPURETPEXT     ; check for CPU_RETP_EXT problem
```

CHECKLONDON1

Control:

From the **Project** menu, select **Project Options...**
Expand the **Application** entry, expand the **Processor** entry and select **CPU Problem Bypasses and Checks**. Enable the **LONDON.1 -- Breakpoint before JMPI/CALLI** check box.

CHECKLONDON1 / NOCHECKLONDON1

Abbreviation:

LONDON1 / NOLONDON1

Class:

General

Default:

NOCHECKLONDON1

Description:

The XC16x / Super10 architectures have problems with CALLI, which has to be circumvented using ATOMIC#2. With this control, the assembler gives a warning when a CALLI instruction is not protected by an ATOMIC sequence of at least length 2.

Example:

```
$CHECKLONDON1    ; enable checking for LONDON.1 problem
```

CHECKPECC

Control:

From the **Project** menu, select **Project Options...**
Expand the **Application** entry, expand the **Processor** entry and select **CPU Problem Bypasses and Checks**. Enable the **CPU_SEGPEC -- PEC interrupt after (...)** check box.

CHECKPECCP / NOCHECKPECCP

Abbreviation:

PECCP / NOPECCP

Default:

NOCHECKPECCP

Description:

The Infineon EWGold Lite core can have a problem when PEC interrupts arrive to close together. This can cause a wrong SRCPx source value to be used for the PEC transfer. The problem also occurs when the context pointer register CP is explicitely modified. To work around this silicon problem, guard the offending instructions against PEC interrupts through an EXTEND sequence. For explicit CP modifications, the extend sequence needs to be 3 instructions at least, for the SRCPx modifications, the sequence needs to be 2 instructions at least.

Example:

```
$CHECKPECCP       ;; check for the PEC interrupt problem
   SCXT CP, #12   ;; possible problem, error is generated
   ATOMIC #3
   MOV CP, R1     ;; properly guarded
   MOV SRCP0, R1  ;; properly guarded
   ADD SRCP0, R1  ;; possible problem, error is generated
```

CHECKLONDON1751

Control:

From the **Project** menu, select **Project Options...**
Expand the **Application** entry, expand the **Processor** entry and select **CPU Problem Bypasses and Checks**. Enable the **LONDON.1751 -- Write to core SFR while DIV[L][U] executes** check box.

CHECKLONDON1751 / NOCHECKLONDON1751

Abbreviation:

LONDON1751 / NOLONDON1751

Default:

NOCHECKLONDON1751

Description:

The XC16x / Super10 architectures have a problem writing to a CPU SFR while a DIV[L][U] is in progress in the background. There are different ways to solve this problem, you could, for example, not write to a CPU SFR during the DIV operation or stall the pipeline just before a write operation to a CPU SFR. But because interrupts can write to CPU SFRs as well, the entire DIV operation has to be protected from interrupts (unless it is certain that no interrupt writes to a CPU SFR).

Another solution is built around the DIV operation:

```
ATOMIC #2
DIV Rx
MOV Ry, MDL/MDH
```

With this control, the assembler checks for the sequence around DIV[L][U]. If a DIV is proven to be free of this problem, you can disable the check around the respective DIV operation using $NOLONDON1751 and re-enable it after the DIV. Because a command line control will override any setting globally (thereby effectively ignoring any $LONDON1751 or $NOLONDON1751 controls), it might prove easier to put $NOWA (157) and $WA(157) around the instructions in question.

Example:

```
$CHECKLONDON1751      ;; enable checking for LONDON.1751
   ATOMIC #2          ;; protected DIV, but no warning
   DIV R1             ;; DIV
   MOV R2, MDL        ;; stall pipeline until finished
   ATOMIC #3          ;; protect from interrupt
$NOCHECKLONDON1751    ;; disable checking
   DIV R2             ;; DIV
$CHECKLONDON1751      ;; re-enable checking
   MOV R1, R2         ;; any instruction,breaks sequence
   MOV R3, MDH        ;; stall pipeline
```

CHECKLONDONRETP

Control:

From the **Project** menu, select **Project Options...**
Expand the **Application** entry, expand the **Processor** entry and select **CPU Problem Bypasses and Checks**. Enable the **LONDON RETP -- Problem with RETP on CPU SFRs (check only)** check box.

CHECKLONDONRETP / NOCHECKLONDONRETP

Abbreviation:

LONDONRETP / NOLONDONRETP

Default:

NOCHECKLONDONRETP

Description:

Some derivatives of the XC16x / Super10 architecture have a problem with RETP on CPU SFRs.When the CHECKLONDONRETP control is up, the assembler generates a warning whenever RETP is used on one of the CPU SFRs of the XC16x / Super10 architecture.

Example:

```
a166 london.src CHECKLONDONRETP
;check for RETP problem while assembling file
```

CHECKMULDIV

Control:

From the **Project** menu, select **Project Options...**
Expand the **Application** entry, expand the **Processor** entry and select **CPU Problem Bypasses and Checks**. Enable the **CPU.18/Problem 7/CPU.2 -- Interrupted multiply and divide instructions** check box.

CHECKMULDIV / NOCHECKMULDIV

Abbreviation:

MD / NOMD

Class:

General

Default:

NOCHECKMULDIV

Description:

Several processor cores have problems with interrupted MUL or DIV sequences. The CHECKMULDIV control instructs the assembler to issue a warning whenever a MUL or DIV is encountered that is not protected by an ATOMIC sequence.

MUL and DIV can also be protected by disabling interrupts using the appropriate PSW bit. This control does not check for that type of protection, which is used for C166/ST10 non-extended architectures, because that instruction set lacks the ATOMIC instruction.

Example:

```
$NOMD     ; disable checking for unprotected MUL or DIV
DIV R1    ; this is an unprotected DIV, but no warning
          ; is issued
$MD       ; enable checking for unprotected MUL or DIV
```

CHECKSTBUS1

Control:

From the **Project** menu, select **Project Options...**
Expand the **Application** entry, expand the **Processor** entry and select **CPU Problem Bypasses and Checks**. Enable the **ST_BUS.1 -- JMPS followed by PEC transfer** check box.

CHECKSTBUS1 / NOCHECKSTBUS1

Abbreviation:

STBUS1 / NOSTBUS1

Class:

General

Default:

NOCHECKSTBUS1

Description:

When a JMPS instruction is followed by a PEC transfer, the generated PEC source address is false. This results in an incorrect PEC transfer. Workaround: Substitute JMPS by the CALLS instruction with 2 POP instructions at the new program location. You can avoid this problem by disabling interrupts by using the ATOMIC #2 instruction before the JMPS.

Please refer to the ST10 errata sheets of the used derivative for a description of the ST_BUS.1 problem. See also the description of warning W 154.

Example:

```
$CHECKSTBUS1    ; check for ST_BUS.1 problem
```

DATE

Control:

From the **Project** menu, select **Project Options...**
Expand the **Assembler** entry and select **List File**.
In the **List file** box, select **Default name** or **Name list file**. Enter a date in the **Date in page header** field.

DATE('*date*')

Abbreviation:

DA

Class:

Primary

Default:

system date

Description:

a166 uses the specified date-string as the date in the header of the list file. Only the first 11 characters of string are used. If less than 11 characters are present, **a166** pads them with blanks.

Examples:

```
; Nov 25 1992 in header of list file
a166 x.src date('Nov 25 1992')

; 25-11-92 in header of list file
a166 x.src da('25-11-92')
```

DEBUG

Control:

From the **Project** menu, select **Project Options...**
Expand the **Assembler** entry and select **Debug**.
Enable the **Generate debug information** check box.

DEBUG / NODEBUG

Abbreviation:

DB / NODB

Class:

Primary

Default:

NODEBUG

Description:

Controls the generation of debugging information in the object file. DEBUG enables the generation of debugging information and NODEBUG disables it. When DEBUG is set, the amount of symbolic debug information is determined by the

LINES / NOLINES,
LOCALS / NOLOCALS,
SYMB / NOSYMB
ASMLINEINFO / NOASMLINEINFO

controls.

Example:

```
a166 x.src db   ; generate debug information
```

EJECT

Control:

EJECT

Abbreviation:

EJ

Class:

General

Default:

New page started when page length is reached

Description:

The current page is terminated with a formfeed after the current (control) line, the page number is incremented and a new page is started. Ignored if NOPAGING, NOPRINT or NOLIST is in effect.

Example:

```
.           ; assembler source lines
.
$eject      ; generate a formfeed
.
.           ; more source lines
$ej         ; generate a formfeed
.
.
```

ERRORPRINT

Control:

From the **Project** menu, select **Project Options...**
Expand the **Assembler** entry and select **Miscellaneous**.
Add the control to the **Additional controls** field.

ERRORPRINT[(*file*)] / NOERRORPRINT

Abbreviation:

EP / NOEP

Class:

Primary

Default:

NOERRORPRINT

Description:

ERRORPRINT displays the error messages at the console and also redirects the error messages to an error list file. If no extension is given the default `.erl` is used. If no filename is specified, the error list file has the same name as the input file with the extension changed to `.erl`.

See also the chapter on assembler invocation.

Examples:

```
a166 x.src ep(errlist)    ; redirect errors to file
                          ; errlist.erl
a166 x.src ep             ; redirect errors to file
                          ; x.erl
```

EXPANDREGBANK

Control:

From the **Project** menu, select **Project Options...**
Expand the **Assembler** entry and select **Miscellaneous**.
Add the control to the **Additional controls** field.

EXPANDREGBANK / NOEXPANDREGBANK

Abbreviation:

XRB / NOXRB

Class:

Primary

Default:

EXPANDREGBANK

Description:

The assembler by default expands privately declared register banks in a module with the registers used in the module code and with the registers declared in common register banks in that module. This is required if all the code in a single module uses the same register bank.

If the task model is not adhered to and code in the same module can be invoked by different tasks, different, non overlapping register banks may be present. In that case, the assembler should *not* expand register banks with common registers from a register bank potentially used in a different task.

To instruct the assembler not to expand register banks automatically, use the NOEXPANDREGBANK control.

Please note that this assumes that you correctly declare and define register banks that can accommodate all the general purpose registers used in the code. Because register banks are no longer expanded with the registers actually used (because it is unknown which register bank is used at that specific time and place), the assembler gives no warnings for missing registers used in the code (warning 125) for missing registers used in common register bank definitions (warning 124).

Examples:

```
a166 x.src noxrb  ; prevent the assembler from automatic
                  ; expansion of register banks
```

EXTEND / EXTEND1 / EXTEND2 / EXTEND22 / EXTMAC

Control:

From the **Project** menu, select **Project Options...**
Expand the **Application** entry and select **Processor**.
From the **Processor** box, select a processor or select **User Defined**.

If you selected **User Defined**, expand the **Processor** entry and select **User Defined Processor**. Select the correct **Instruction set**.

EXTEND / EXTEND1 / EXTEND2 / EXTEND22 / EXTMAC

Abbreviation:

EX / EX1 / EX2 / EX22 / XC

Class:

Primary

Default:

EXTEND

Description:

The EXTEND, EXTMAC, EXTEND1, EXTEND2 and EXTEND22 controls select the processor core for the application. Only one of these controls can be active at the same time: the the last control used will be the active control. Like any primary control, control settings on the command line overrule control settings in the source file.

EXTEND	(default) Selects the standard C166/ST10 extended architecture as used by the Infineon C16x and STMicroelectronics ST10.
EXTMAC	Selects the standard C166/ST10 extended architecture with MAC co-processor support such as the ST10x272
EXTEND1	Enables support for the C166S v1.0 architecture.

EXTEND2 Enables support for the CX16x / SUPER-10 architecture,including support for the MAC co-processor.

EXTEND22 Enables support for enhanced Super10, such as the Super10M345. This includes support for the MAC co-processor.

Example:

```
a166 x.src extend
```

EXTPEC16

Control:

From the **Project** menu, select **Project Options...**
Expand the **Assembler** entry and select **Miscellaneous**.
Add the control to the **Additional assembler controls** field.

EXTPEC16 / NOEXTPEC16

Abbreviation:

EP16 / NOEP16

Class:

Primary

Default:

NOEXTPEC16

Description:

The EXTPEC16 control enables the use of PECC8 to PECC15 in a PECDEF directive. Please note that EXTPEC16 does not imply EXTPEC. The location of the relevant SRCPx and DSTPx registers to be reserved is determined by EXTPEC or EXTEND2 during the locator phase.

Example:

```
a166 pecc.src EP16

; allow use of PECC8-15 in PECDEF directive
```

FLOAT

Control:

From the **Project** menu, select **Project Options...**
Expand the **Assembler** entry and select **Miscellaneous**.
Add the control to the **Additional assembler controls** field.

FLOAT(*float-type*)

Abbreviation:

FL(*float-type*)

Class:

General

Default:

FLOAT(NONE)

Description:

This control places the *float-type* in the object file. The linker checks for conflicts between the *float-type* in the linked modules.

float-type is one of:

NONE	no floating point used
SINGLE	single precision floating point
ANSI	ANSI floating point

The control is set by the C compiler to prevent linking mixed floating point types or linking the wrong C library.

The class of the control is general because the C compiler only knows if floating point was used at the end of the module. With a general control the compiler can generate the FLOAT control at the end of its output. The only action of the assembler with this control is setting the *float-type* flag in the object file. The last FLOAT control in the source governs.

The linker issues an error if it detects a module assembled with FLOAT(SINGLE) and a module assembled with FLOAT(ANSI). Using FLOAT(NONE) never introduces conflicts.

Example:

```
a166 x.src FLOAT( ANSI )
; check for conflicts on floating point type
```

GEN / GENONLY / NOGEN

Control:

GEN / GENONLY / NOGEN

Abbreviation:

GE / GO / NOGE

Class:

General

Default:

–

Description:

These controls are ignored, since the macro preprocessor is not integrated with the assembler. They are included for compatibility. The assembler generates a warning on level 2 when one of these controls is used.

GSO

Control:

From the **Project** menu, select **Project Options...**
Expand the **Assembler** entry and select **Miscellaneous**.
Add the control to the **Additional assembler controls** field.

GSO

Abbreviation:

GSO

Class:

Primary

Default:

-

Description:

Enable global storage optimizer. Please refer to section 10.6 *gso166* in chapter *Utilities* for more details.

HEADER

Control:

From the **Project** menu, select **Project Options...**
Expand the **Assembler** entry and select **Miscellaneous**.
Add the control to the **Additional assembler controls** field.

HEADER / NOHEADER

Abbreviation:

HD / NOHD

Class:

Primary

Default:

NOHEADER

Description:

This control specifies that a header page must be generated as the first page in the list file. A header page consists of a page header (assembler name, the date, time and the page number, followed by a title), assembler invocation and the status of the primary **a166** controls.

Example:

```
a166 x.src hd

; generate header page in list file
```

INCLUDE

Control:

INCLUDE(*file*)

Abbreviation:

IC

Class:

General

Default:

-

Description:

The INCLUDE control is interpreted by the macro preprocessor. When this control is recognized by the assembler, a warning on level 2 is generated.

LINES

Control:

From the **Project** menu, select **Project Options...**
Expand the **Assembler** entry and select **Miscellaneous**.
Add the control to the **Additional assembler controls** field.

LINES / NOLINES

Abbreviation:

LN / NOLN

Class:

General

Default:

LINES

Description:

LINES keeps line number information in the object file. This information can be used by high level language debuggers. LINES specifies **a166** to generate symbol records defined by the ?LINE and ?FILE directives of the assembler when the DEBUG control is in effect. The line number information is not needed to produce executable code. The NOLINES control removes this information from the output file. NOLINES decreases the size of the output object file.

Example:

```
.           ; source lines
$lines      ; keep line number information
.           ; of the following source lines
.
$nolines    ; the line number information of the
.           ; following source lines is removed by a166.
```

LIST

Control:

From the **Project** menu, select **Project Options...**
Expand the **Assembler** entry and select **List File**.
In the **List file** box, select **Default name** or **Name list file**. Enable or disable the **List source lines** check box.

LIST / NOLIST

Abbreviation:

LI / NOLI

Class:

General

Default:

LIST

Description:

Switch the listing generation on or off. These controls take effect starting at the next line. LIST does not override the NOPRINT control.

Example:

```
$noli   ; Turn listing off. These lines are not
        ; present in the list file
.
.
$list   ; Turn listing back on. These lines are
        ; present in the list file
.
.
```

LISTALL

Control:

From the **Project** menu, select **Project Options...**
Expand the **Assembler** entry and select **Miscellaneous**.
Add the control to the **Additional assembler controls** field.

LISTALL / NOLISTALL

Abbreviation:

LA / NOLA

Class:

Primary

Default:

NOLISTALL

Description:

The LISTALL control causes a listing to be generated in every pass of the assembler instead of just in pass 3. This can be useful for getting a listing with error messages, even when the assembler does not perform pass 3 due to errors occurring in pass 1 or 2. LISTALL overrules a following NOPRINT.

Example:

```
a166 x.src listall   ; generate listing in every
                     ; pass of the assembler
```

LOCALS

Control:

From the **Project** menu, select **Project Options...**
Expand the **Assembler** entry and select **Miscellaneous**.
Add the control to the **Additional assembler controls** field.

LOCALS / NOLOCALS

Abbreviation:

LC / NOLC

Class:

General

Default:

LOCALS

Description:

LOCALS specifies to generate local symbol records when the DEBUG control is in effect. The debugger uses this information. It is not needed to produce executable code. When NOLOCALS is set **a166** does not generate local symbol records.

Example:

```
; source lines
.
.
$locals     ; a166 keeps local symbol information
.           ; of the following source lines
.
.
$nolocals   ; a166 keeps no local symbol
.           ; information of the following
.           ; source lines
.
```

MISRAC

Control:

From the **Project** menu, select **Project Options...**
Expand the **C Compiler** entry and select **MISRA C**.
Select a MISRA C configuration. Optionally, in the **MISRA C Rules** entry, specify the individual rules.

MISRAC(*string*)

Abbreviation:

MC

Class:

Primary

Default:

-

Description:

MISRAC sets the string that is passed to the linker/locator in the object file. The string consists of 32 hexadecimal characters, each representing four possible MISRA C checks. Check numbering starts from the right.

This option is controlled by the C compiler's MISRA C feature, and therefore does not require any user interaction from this assembler control.

Example:

```
a166 x.src MC(74000000100000000000000000000002)
    ; assemble x.src and tell the linker/locator that
    ; MISRA C checks 2(2), 93(1), 123(4) and 125-127(7)
    ; were used during the compiling process.
```

MOD166

Control:

MOD166 / NOMOD166

Abbreviation:

M166 / NOM166

Class:

Primary

Default:

MOD166

Description:

This control is included for backward compatibility. This control has no effect.

MODEL

Control:

From the **Project** menu, select **Project Options...**
Expand the **Application** entry and select **Memory Model**.
In the **Memory model** box, select a memory model.

MODEL(*modelname*)

Abbreviation:

MD(*modelname*)

Class:

Primary

Default:

MODEL(NONE)

Description:

This control indicates the C compiler memory model. The model is supplied to the linker via the object file. The linker checks for conflicts between the memory models of the objects. Using model NONE never causes a conflict with the other models. The linker supplies the model via the linker object file to the locator, which will check for conflicts between tasks.

modelname is one of: NONE, TINY, SMALL, MEDIUM, LARGE, HUGE

Example:

```
a166 x.src md( tiny )

; check for conflicts on TINY model
```

The warning "W 138 FAR procedures in NONSEGMENTED mode not necessary" is no longer issued if MODEL(SMALL) is in effect.

OBJECT

Control:

From the **Project** menu, select **Project Options...**
Expand the **Assembler** entry and select **Miscellaneous**.
Add the control to the **Additional assembler controls** field.

OBJECT[(*file*)] / NOOBJECT

Abbreviation:

OJ / NOOJ

Class:

Primary

Default:

OBJECT(*sourcefile*.obj)

Description:

The OBJECT control specifies an alternative name for the object file. If no extension is given the default `.obj` is used. If no filename is specified, the object file has the same name as the input file with the extension changed to `.obj`. The NOOBJECT control causes no object file to be generated.

Examples:

```
a166 x.src           ; generate object file x.obj
a166 x.src oj        ; generate object file x.obj
a166 x.src nooj      ; do not generate an object file
```

OPTIMIZE

Control:

From the **Project** menu, select **Project Options...**
Expand the **Assembler** entry and select **Miscellaneous**.
Enable the **Optimize for generic instructions** check box.

OPTIMIZE / NOOPTIMIZE

Abbreviation:

OP / NOOP

Class:

General

Default:

OPTIMIZE

Description:

NOOPTIMIZE turns off the optimization for forward generic jmp and call instructions. Normally the assembler tries to select a relative jmp (JMPR) or relative call (CALLR) instruction for a generic jmp/call in an absolute or relocatable section, even with forward references. If the optimization is turned off, a forward generic jmp is always translated to an absolute jmp (JMPA) and call is translated to an absolute call (CALLA).

Example:

```
$noop
; turn optimization off
; source lines

$op
; turn optimization back on
; source lines
```

PAGELENGTH

Control:

From the **Project** menu, select **Project Options...**
Expand the **Assembler** entry and select **List File**.
In the **List file** box, select **Default name** or **Name list file**. Enter the number of lines in the **Page length (20–255)** field.

PAGELENGTH(*lines*)

Abbreviation:

PL

Class:

Primary

Default:

PAGELENGTH(60)

Description:

Sets the maximum number of lines on one page of the listing file. This number does include the lines used by the page header (4). The valid range for the PAGELENGTH control is 20 - 255.

Example:

```
a166 x.src pl(50)     ; set page length to 50
```

PAGEWIDTH

Control:

From the **Project** menu, select **Project Options...**
Expand the **Assembler** entry and select **List File**.
In the **List file** box, select **Default name** or **Name list file**. Enter the number of characters in the **Page width (60–255)** field.

PAGEWIDTH(*characters*)

Abbreviation:

PW

Class:

Primary

Default:

PAGEWIDTH(120)

Description:

Sets the maximum number of characters on one line in the listing. Lines exceeding this width are wrapped around on the next lines in the listing. The valid range for the PAGEWIDTH control is 60 - 255. Although greater values for this control are not rejected by the assembler, lines are truncated if they exceed the length of 255.

Example:

```
a166 x.src pw(130)

; set page width to 130 characters
```

PAGING

Control:

From the **Project** menu, select **Project Options...**
Expand the **Assembler** entry and select **List File**.
In the **List file** box, select **Default name** or **Name list file**. Enable the **Format list file into pages** check box.

PAGING / NOPAGING

Abbreviation:

PA / NOPA

Class:

Primary

Default:

PAGING

Description:

Turn the generation of formfeeds and page headers in the listing file on or off. If paging is turned off, the EJECT control is ignored.

Example:

```
a166 x.src nopa

; turn paging off: no formfeeds and page headers
```

PEC

Control:

From the **Project** menu, select **Project Options...**
Expand the **Assembler** entry and select **Miscellaneous**.
Add the control to the **Additional assembler controls** field.

PEC / NOPEC

Abbreviation:

PC / NOPC

Class:

General

Default:

PEC

Description:

When the check for CPU.21 silicon problem is enabled with the CHECKCPU21 control, a warning is given if the BFLDx instruction is not protected by ATOMIC, EXTR, EXTP, EXTPR, EXTS or EXTSR. In this case a PEC transfer may occur just before the execution of BFLDx.

If you know that PEC transfers do not occur, you can use NOPEC/PEC to prevent this warning. Currently this information is used in conjunction with the CHECKCPU21 control. For CPU.21, you can also use this control if PEC transfers can occur, but not in a problematic way. For example if your PEC source and destination pointers point to proper addresses.

See the CPU.21 problem description for a more in-depth explanation.

Examples:

```
NOP                          ; PEC on by default
BFLDH SYSCON, #0F0h, #0F0h   ; possible CPU21 problem when
                             ; PEC transfer occurs
$NOPEC                       ; known that no PEC transfers
                               will occur now

NOP
BFLDH SYSCON, #0F0h, #0F0h   ; no CPU21 problem
$PEC                         ; PEC transfers can occur
                               again
```

PRINT

Control:

From the **Project** menu, select **Project Options...**
Expand the **Assembler** entry and select **List File**.
In the **List file** box, select **Default name** or select **Name list file** and enter a name for the list file. If you do not want a list file, select **Skip list file**.

PRINT[(*file*)] / NOPRINT

Abbreviation:

PR / NOPR

Class:

Primary

Default:

PRINT(*sourcefile*.lst)

Description:

The PRINT control specifies an alternative name for the listing file. If no extension for the filename is given, the default extension `.lst` is used. If no filename is specified, the list file has the same name as the input file with the extension changed to `.lst`. The NOPRINT control causes no listing file to be generated. NOPRINT overrules a following LISTALL.

Examples:

```
a166 x.src                ; list filename is x.lst
a166 x.src to out.obj     ; list filename is x.lst
a166 x.src pr(mylist)     ; list filename is mylist.lst
```

RETCHECK

Control:

From the **Project** menu, select **Project Options...**
Expand the **Assembler** entry and select **Diagnostics**.
Enable the **Check for correct return instruction from subroutine** check box.

RETCHECK / NORETCHECK

Abbreviation:

RC / NORC

Class:

General

Default:

RETCHECK

Description:

NORETCHECK turns off the checking for the correct return instruction from a subroutine. For example, an interrupt task must be returned from with a RETI instruction, if the assembler finds another return instruction within the interrupt task an error will be generated.

RETCHECK turns on the checking for the correct return instruction from a routine.

The errors ”E 353 wrong RETurn mnemonic - for TASK procedures use RETI” and ”E 354 wrong RETurn mnemonic - for FAR procedures use RETS” are no longer issued if NORETCHECK is in effect.

Example:

```
PRC  PROC  TASK
     .
     .
     .
     ATOMIC #03h
     PUSH   R5
     PUSH   R4
     RETS          ; when RC is set E 353 will be issued
     .
     .
     .
     RETI
PRC  ENDP
```

The assembler will give an error on the RETS instruction, because a task procedure must be ended with a RETI instruction.

The code in this example may be generated by the C compiler in some special cases. The C compiler will use the NORETCHECK control because it knows that this code sequence is correct.

SAVE / RESTORE

Control:

SAVE / RESTORE

Abbreviation:

SA / RE

Class:

General

Default:

-

Description:

SAVE stores the current value of the LIST / NOLIST controls onto a stack. RESTORE restores the most recently SAVEd value; it takes effect starting at the next line. SAVEs can be nested to a depth of 16.

Example:

```
$nolist
; source lines
$save             ; save values of LIST / NOLIST

$list

$restore          ; restore value (nolist)
```

SEGMENTED

Control:

From the **Project** menu, select **Project Options...**
Expand the **Application** entry and select **Memory Model**.
In the **Memory model** box, select the **Medium**, **Large** or **Huge** memory model.

SEGMENTED / NONSEGMENTED

Abbreviation:

SG / NOSG

Class:

Primary

Default:

NONSEGMENTED

Description:

NONSEGMENTED specifies that **a166** translates the source module to the non-segmented memory mode. The ASSUME directive and DPP prefixes are not needed in this model. SEGMENTED uses the segmented memory model. A DPP register must be associated. A combination of the controls SEGMENTED and ABSOLUTE is impossible.

Example:

```
a166 x.src sg      ; segmented memory model
```

STDNAMES

Control:

From the **Project** menu, select **Project Options...**
Expand the **Assembler** entry and select **Miscellaneous**.
Select **Use default SFR definitions for selected CPU** or
select **Specify SFR file (.def)** and enter a filename.

STDNAMES(*std-file*)

Abbreviation:

SN

Class:

Primary

Default:

-

Description:

With this control **a166** includes a *std-file* before loading the source module. The *std-file* contains a subset of the system names such as (E)SFRs and memory mapped I/O registers. This control is useful if you want to define your own subset of system names. You can only use the DEF and LIT directives in the *std-file*.

In case of redefinition of system names or system addresses, the assembler reports an error.

The directory where to find the *std-file* can be specified with the A166INC environment variable.

When the *std-file* is not present in the current directory or in one of the directories specified with the A166INC environment variable, **a166** searches the directory `etc` relative to the path the binary is started from. For example, when **a166** is started from `\c166\bin`, the *std-file* is searched in the directory `\c166\etc`.

Example:

```
a166 x.src sn(names.def)

; use own subset of system names from file
; names.def
```

STRICTTASK

Control:

From the **Project** menu, select **Project Options...**
Expand the **Assembler** entry and select **Miscellaneous**.
Enable the **Assemble strictly with Task concept** check box.

STRICTTASK / NOSTRICTTASK

Abbreviation:

ST / NOST

Class:

Primary

Default:

NOSTRICTTASK

Description:

The STRICTTASK control causes the assembler to work strictly with the Task Concept. When STRICTTASK is set you are not allowed to have more than one REGDEF or REGBANK directive and more than one task per assembly source module. Use this control to be fully compatible with the Infineon toolchain.

Example:

```
a166 x.src st

; assemble according to the Task Concept
```

SYMB

Control:

From the **Project** menu, select **Project Options...**
Expand the **Assembler** entry and select **Miscellaneous**.
Add the control to the **Additional assembler controls** field.

SYMB / NOSYMB

Abbreviation:

SM / NOSM

Class:

General

Default:

SYMB

Description:

SYMB specifies **a166** to allow high level language symbols defined by the ?SYMB directive of the assembler to be present in the output file when the DEBUG control is in effect. The symbols are used by a high level language debugger. This debug information is not needed to produce executable code. NOSYMB removes ?SYMB symbols from the output file.

Example:

```
; source lines
.
$symb
; a166 keeps ?SYMB symbol information of
; the following source lines
.
$nosymb
; a166 keeps no ?SYMB symbol information of
; the following source lines
```

SYMBOLS

Control:

From the **Project** menu, select **Project Options...**
Expand the **Assembler** entry and select **List File**.
In the **List file** box, select **Default name** or **Name list file**. Enable the **Generate symbol table** check box.

SYMBOLS / NOSYMBOLS

Abbreviation:

SB / NOSB

Class:

Primary

Default:

NOSYMBOLS

Description:

SYMBOLS prints a symbol table at the end of the list file. This symbol table contains alphabetical lists of all assembler identifiers and their attributes. SYMBOLS does not override the NOPRINT control.

Example:

```
a166 x.src symbols

; prints symbol table at end of list file
```

TABS

Control:

From the **Project** menu, select **Project Options...**
Expand the **Assembler** entry and select **List File**.
In the **List file** box, select **Default name** or **Name list file**. Enter the number of blanks for a tab in the **Tab width (1–12)** field.

TABS(*number*)

Abbreviation:

TA

Class:

Primary

Default:

TABS(8)

Description:

TABS specifies the number of blanks that must be inserted for a tab character in the list file. TABS can be any decimal value in the range 1 - 12.

Example:

```
a166 x.src ta(4)     ; use 4 blanks for a tab
```

TITLE

Control:

From the **Project** menu, select **Project Options...**
Expand the **Assembler** entry and select **List File**.
In the **List file** box, select **Default name** or **Name list file**. Enter a title in the **Title in page header** field.

TITLE(*'title'*)

Abbreviation:

TT

Class:

General

Default:

TITLE(*module-name*)

Description:

Sets the title which is to be used at the second line in the page headings of the list file. To ensure that the title is printed in the header of the first page, the control has to be specified in the first source line. The title string is truncated to 60 characters. If the page width is too small for the title to fit in the header, it is be truncated even further.

Example:

```
$title('NEWTITLE')

; title in page header is NEWTITLE
```

TYPE

Control:

From the **Project** menu, select **Project Options...**
Expand the **Assembler** entry and select **Miscellaneous**.
Add the control to the **Additional assembler controls** field.

TYPE / NOTYPE

Abbreviation:

TY / NOTY

Class:

Primary

Default:

TYPE

Description:

TYPE tells the assembler to produce type information in the records describing the symbol type used in the source file. The records are needed by the **l166** linker to perform a type checking during linking. NOTYPE does not produce type information.

Example:

```
a166 x.src notype   ; no type information is produced
```

WARNING

Control:

From the **Project** menu, select **Project Options...**
Expand the **Assembler** entry and select **Diagnostics**.
Select **Suppress all warnings**, **Display important warnings** or **Display all warnings**.

WARNING(*number*) / NOWARNING(*number*)

Abbreviation:

WA / NOWA

Class:

General

Default:

WARNING(1)

Description:

This control allows you to set a general warning level or enable and disable individual warnings. The general warning levels can have the following values:

0 display no warnings
1 display important warnings only (default)
2 display all warnings

When a valid warning number is supplied, this specific warning will be supressed (nowarning) or enabled (warning).

Disabling all warnings using general warning level 0 will also disable warnings specifically enabled before or after setting the general warning level. Unimportant warnings (for example: those not given on general warning level 1) cannot be enabled individually while the general warning level is 1 (or 0)

Example:

```
a166 x.src wa(1)  ; display only important warnings
a166 y.src wa(2) nowa(156)
  ; disable warning nr 156, display all other warnings
```

WARNINGASERROR

Control:

From the **Project** menu, select **Project Options...**
Expand the **Assembler** entry and select **Diagnostics**.
Enable the **Exit with error status even if only warnings were generated** check box.

WARNINGASERROR / NOWARNINGASERROR

Abbreviation:

WAE / NOWAE

Class:

General

Default:

NOWAE

Description:

When this control is up, the assembler will exit with an error status, even if there were only warnings generated during assembly.

Example:

```
a166 x.src wae  ; always exit with error status, unless
                ; no warnings and no errors were
                ; generated.
```

XREF

Control:

From the **Project** menu, select **Project Options...**
Expand the **Assembler** entry and select **List File**.
In the **List file** box, select **Default name** or **Name list file**. Enable the **Generate cross-reference table** check box.

XREF / NOXREF

Abbreviation:

XR / NOXR

Class:

Primary

Default:

NOXREF

Description:

The XREF control generates a cross-reference table. This table contains a list of all local symbols with the line number of the source file at which they appear. The first line number is the line where the local symbol is defined.
NOXREF causes no cross-reference table to be generated.

Example:

```
a166 x.src xref    ; generate cross-reference table
```

CHAPTER 7

ASSEMBLER DIRECTIVES

TASKING

1 CHAPTER

7.1 INTRODUCTION

Assembler directives, are used to control the assembly process. Rather than being translated into a C166/ST10 machine instruction, assembler directives are interpreted by the assembler. The other directives perform actions like defining or switching sections, defining symbols or changing the location counter. The **a166** assembler supports all directives known by the Infineon Assembler. However the **a166** assembler knows some new directives and some directives are more flexible (less restrictions).

The directives will be described in groups where they belong to. First an overview is given of all directives.

7.2 DIRECTIVES OVERVIEW

	Directive		Description
DEBUGGING			
	?FILE	*"filename"*	Generate filename symbol record.
	?LINE	[*abs_expr*]	Generate line number symbol record.
	?SYMB	*string*, *expression* [,*abs-expr*] [,*abs-*expr]	Generate hll symbol info record.
	#[line]	*line-number "filename"*	Pass line and file info to assembler.
SECTIONS			
name	SECTION	*section-type* [*align-type*] [*combine-type*] ['*class*']	Define logical section.
name	ENDS		End logical section.
	ASSUME	DPP*n:secpart* [,DPP*n:secpart*]...	Assume DPP usage.
	ASSUME	NOTHING	Assume no DPP usage.
group-name	CGROUP	*sect-name* [,*sect-name*]...	Group code type sections
group-name	DGROUP	*sect-part* [,*sect-part*]...	Group data type sections
DEFINING REGISTER BANKS AND PEC CHANNELS			
name	BLOCK	*description*	Separate registers into logical units
[*reg-bank-name*]	REGDEF	[*reg-range* [*type*]] [,*reg-range* [*type*]]...	Define or declare register bank.
[*reg-bank-name*]	REGBANK	[*reg-range* [*type*]] [,*reg-range* [*type*]]...	Define or declare register bank (Private).
com-reg-name	COMREG	*reg-range*	Common register bank.
	PECDEF	*channel-range* [,*channel-range*]...	Define PEC channel usage
	SSKDEF	*stack-size-number*	Define stack size

*Table 7-1: **a166** directives*

	Directive		Description
ACCESSING DATA OPERANDS			
lit-name	LIT	'*lit-string*'	Define text replacement.
equ-name	EQU	*expression*	Assign expression to name.
set-name	SET	*expression*	Define symbol for expression.
bit-name	BIT	*bit-address*	Assign bit address to name.
name	DEFR	*SFR-address*[[,*attr*][,*method*,*reset*,*comment*]]	Define SFR name for REG to name.
name	DEFA	*system-addr*[[,*attr*][,*method*,*reset*,*comment*]]	Define system address for REG to name.
name	DEFX	*address*[[,*attr*][,*method*,*reset*,*comment*]]	Define address for REG to name.
name	DEFB	*bit-address*[,*attribute*[,*comment*]]	Define bit address for REG to name.
name	DEFBF	*SFR*,*bit-offset*,*bit-offset*[,*attribute*]	Define bit field for REG to name.
	DEFVAL	*value*,*comment*	Define bit or bitfield value.
	TYPEDEC	*name:type* [,*name:type*]...	Define type attribute of symbol name
DEFINING AND INITIALIZING DATA			
[*name*]	DB	*init* [,...]	1-byte initialization
[*name*]	DW	*init* [,...]	2-byte initialization
[*name*]	DDW	*init* [,...]	4-byte initialization
[*name*]	DBIT	[*number*]	bit indeterminate initialization
[*name*]	DS	*number*	Indeterminate initialization
[*name*]	DSB	*number*	Reserve 1**number* of bytes (Same as DS)
[*name*]	DSW	*number*	Reserve 2**number* of bytes
[*name*]	DSDW	*number*	Reserve 4**number* of bytes
[*name*]	DBFILL	*length*, *value*	Fill memory area of *length* bytes
[*name*]	DWFILL	*length*, *value*	Fill memory area of *length* words
[*name*]	DDWFILL	*length*, *value*	Fill memory area of *length* double words
[*name*]	DSPTR	*init* [,*init*]...	Segment Pointer initialization
[*name*]	DPPTR	*init* [,*init*]...	Page Pointer initialization
[*name*]	DBPTR	*init* [,*init*]...	Bit pointer initialization
name	LABEL	*type*	Define a label.
name	PROC	[*type*]	Define a label to a procedure.
name	PROC	TASK [*task-name*][INTNO{[*int-name*][=*int-no*]}]	Define a label to a procedure
name	ENDP		Indicate end of procedure.
PROGRAM LINKAGE			
	PUBLIC	*name* [,...]	Define symbols to be public
	GLOBAL	*name* [,...]	Define symbols to be global
	EXTERN EXTRN	[DPP*x:*] *name: type* [,[DPP*x:*] *name:*type]... [DPP*x:*] *name: type* [,[DPP*x:*] *name:*type]...	Set symbols to be defined public/global.
	NAME	*module-name*	Define module name
	END		End assembly.

*Table 7-1: **a166** directives (continued)*

7.3 DEBUGGING

The assembler **a166** supports the following debugging directives: ?FILE, ?LINE and ?SYMB. These directives will not be used by an assembler programmer. They are used by a high level language code generator as **c166** or a debugger to pass high level language symbol information.

When a preprocessor is used (like **m166**), this preprocessor can supply the name of the original input file and the line number in that file to **a166** by using the **#line** directive.

7.4 LOCATION COUNTER

The location counter keeps track of the current offset within the current section that is being assembled. This value, symbolized by the character '$', is considered as an offset and may only be used in the same context where offset is allowed.

7.5 PROGRAM LINKAGE

The **a166** supplies the necessary directives to support multimodular programs, A program may be composed of many individual modules that are separately assembled. The mechanism in **a166** for communicating symbol information from module to module are the PUBLIC/GLOBAL/EXTERN directives. The PUBLIC directive defines those symbols that may be used by other modules of the same task. The GLOBAL symbol defines those symbols that may be used by other modules, even from different tasks. The EXTERN directive defines for a given module those symbols (defined elsewhere) that can be used. In order to uniquely name different object modules that are to be linked together, use the NAME directive. The END directive is required in all modules.

7.6 DIRECTIVES

The rest of this chapter contains an alphabetical list of the assembler directives.

?FILE

Synopsis:

?FILE "*file_name*"

Description:

This directive is intended mainly for use by a high level language code generator. It generates a symbol record containing the high level source file name, which is written to the object file. Also, the current high level line number is reset to zero. The file name can be used by a high level language debugger.

?LINE

Synopsis:

?LINE [*abs_expr*]

Description:

This directive is intended mainly for use by a high level language code generator. It generates a symbol record containing the high level source file line number, which is written to the object file. The line number can be used by a high level language debugger. *abs_expr* is any absolute expression. If *abs_expr* is omitted, the line number defined by the previous ?LINE or ?FILE is incremented and used.

?SYMB

Synopsis:

?SYMB *string*, *expression* [, *abs_expr*] [, *abs_expr*]

Description:

The ?SYMB directive is used for passing high-level language symbol information to the assembler. This information can be used by a high level language debugger.

#LINE

Synopsis:

[**line**] *line-number* "*filename*"

Description:

This directive is used to pass line and file information to the assembler. The assembler sets the internal line number counter to *line-number* and uses this number in the list file and when printing error messages. The *filename* argument is printed for error messages.

The **#line** directive is generated by the macro preprocessor **m166** and by the C preprocessor of **c166**. If you are familiar with C preprocessor language, it is also possible to use the **c166** C compiler, or an other C preprocessor, instead of the **m166** macro preprocessor to preprocess assembly source.

When using the **c166** C compiler as preprocessor it should be invoked as follows:

```
c166 -E input-filename -o output-filename
```

Example:

```
c166 -E cprep.asm -o cprep.src
```

The file `cprep.asm` is preprocessed, and the output is placed in `cprep.src`.

ASSUME

Synopsis:

ASSUME DPP*n:sectpart* [, **DPP***n:sectpart*]...

or

ASSUME NOTHING

Description:

At run-time, every data memory reference (access to a variable) requires two parts in order to be physically addressed: a page number and a page offset.

The page number is contained in one of the Data Page Pointer (DPP) registers, defining the physical page in which the variable lies. (This value is loaded in the DPP register by the appropriate initialization code). The DPP register number and the offset value is contained in the instruction code which makes the reference. These two values are used to compute the absolute address of the object referenced.

You can use the ASSUME directive to specify what the contents of the DPP registers will be at run-time. This is done to help the assembler to ensure that the data referenced will be addressable.

The assembler checks each data memory reference for addressability based on the contents of the ASSUME directive. The ASSUME directive does not initialize the DPP registers; it is used by the assembler to help you be aware of the addressability of your data. Unless the data is addressable (as defined either by an ASSUME or a page override), the assembler produces an error.

The ASSUME directive also helps the assembler to decide when to automatically generate a page override instruction prefix.

See also the DPPn operator.

Field Values:

DPP*n*	One of the C166/ST10 Data Page Pointer (DPP) registers: DPP0, DPP1, DPP2, DPP3.

sectpart By this field a page number can be defined. It can have the following names:

- ***section name***, as in

```
ASSUME DPP0:DSEC1, DPP1:DSEC3
```

All variables and labels defined in section DSEC1 are addressed with DPP0 and all variables defined in the section DSEC3 are addressed with DPP1.

- ***group name***, as in

```
ASSUME DPP2:DGRP
```

All variables and labels defined in sections which are member of the group DGRP are addressed with DPP2.

- ***variable name*** or ***label name***, as in

```
ASSUME DPP0:VarOrLabName
```

If the variable or label name is defined in a module internal section, all variables or labels defined in this section are addressed with DPP0. If the variable or label name is defined in a module-external section, only this variable can be addressed with DPP0.

- **NOTHING** keyword, as in

```
ASSUME DPP1:NOTHING
```

This indicates that nothing is assumed in the DPP register at that time. If a DPP register is assumed to contain nothing, the assembler does not implicitly use this DPP register for memory addressing. Also possible is: ASSUME NOTHING This is the same as:

```
ASSUME DPP0:NOTHING, DPP1:NOTHING
ASSUME DPP2:NOTHING, DPP3:NOTHING
```

This is the default which remains in effect until the first ASSUME directive is found.

- **SYSTEM** keyword, as in

```
ASSUME DPP1:SYSTEM
```

This keyword enables the addressability of system ranges (via SFR) in SEGMENTED mode, if a SFR is used in a virtual operand combination.

The SYSTEM keyword can also be used in a DGROUP directive, which causes a whole group to be located in the system page (page 3). If this group is assumed to a DPP, SYSTEM is also assumed. If SYSTEM is assumed, it implies that the whole group is assumed also.

Example:

The following example illustrates the use of ASSUME.

```
$SEGMENTED
DSEC1 SECTION DATA
AWORD DW  0
DSEC1 ENDS

DSEC2 SECTION DATA
BYTE1 DB  0
DSEC2 ENDS

DSEC3 SECTION DATA
BYTE2 DB  0
DSEC3 ENDS

CSEC   SECTION CODE
ASSUME DPP0:DSEC1, DPP1:DSEC3
MOV    DPP0, #DSEC1
MOV    DPP1, #DSEC3
MOV    DPP2, #DSEC2
.
.
MOV  R0, AWORD        ; The ASSUME covers the reference.
.                     ; DPP0 points to the base of
.                     ; section DSEC1 that contains AWORD
.
MOV  RL1, DPP2:BYTE1  ; Explicit code. The page override
.                     ; operator covers the reference
MOV  RL1, BYTE1       ; Error!: No DPP register used and
.                     ; no ASSUME has been made.
.
MOV  RL2, BYTE2       ; The ASSUME covers the reference.
.                     ; DPP1 points to the base of
.                     ; section DSEC3 that contains BYTE2
CSEC ENDS
```

When several DPPs are assumed to one *sectpart*, the lowest DPP number is used as DPP prefix. This also happens if, for example, both a label and the section it belongs to are assumed to different DPPs, or if both a section and the group it belongs to, are assumed to different DPPs.

Example:

```
$SEGMENTED

       ASSUME  DPP1:AGRP, DPP2:AVAR1

AGRP   DGROUP  DSEC1, DSEC2

DSEC1  SECTION DATA
AVAR1  DW  1
DSEC1  ENDS

DSEC2  SECTION DATA
       .
       .
       .
DSEC2  ENDS

CSEC   SECTION CODE
PROC1  PROC FAR
       .
       .
       MOV R0, AVAR1  ; DPP1 is used for AVAR1
       .
       .
       ASSUME DPP1:NOTHING
       MOV R0, AVAR1  ; DPP2 is used for AVAR1
       MOV R0, AGRP   ; DPP2 is used for AGRP
       .
       .
       RET
PROC1  ENDP
CSEC   ENDS
```

Example:

ASSUME directives can forward reference a name. Also double forward references are allowed.

```
ASSUME  DPP0:DSEC1  ; Forward reference
ASSUME  DPP1:AVar   ; Double forward reference.

DSEC1   SECTION DATA
        .
        .
        .
DSEC1   ENDS

AVar    EQU WORD PTR wVar + 2

DSEC1   SECTION DATA
wVar    DW 0
        DW 0
DSEC1   ENDS
```

An ASSUME directive remains in effect until it is changed by another ASSUME.

If a multiple ASSUME on predefined symbols is done the lowest DPP number will be used for addressing the predefined symbols.

Example 1:

```
ASSUME  DPP1:?FPSTKOV
ASSUME  DPP3:?FPSTKUN
ASSUME  DPP2:?FACBASE
ASSUME  DPP3:?FACSGN
```

The result of these ASSUME directives is that DPP1 will be used for the predefined symbols.

Example 2:

```
ASSUME  DPP2:?FACEXP
ASSUME  DPP3:?FACMAN_0
ASSUME  DPP1:?FACMAN_2
ASSUME  DPP1:IDENT
```

The result of these ASSUME directives is that DPP2 will be used for the predefined symbols, because DPP1 is used for IDENT.

BIT

Synopsis:

bit-name **BIT** *expression*

Description:

The BIT directive assigns the value of *expression* to the specified *bit-name*. A *bit-name* defined with BIT may not be redefined elsewhere in the program.

The *expression* may not contain forward references to EQUate names, SET names or BIT names. Other forward references are allowed.

Only the bits inside of the bit-addressable internal RAM range can be defined by the BIT directive. For definition of bits in the bitaddressable system range (SFR range), use the DEFB directive.

Field Values:

bit-name This a unique **a166** identifier. This symbol is of type BIT.

bit-address The bit-address must be an absolute or simple relocatable *expression* as stated above.

Examples:

```
BITW   SECTION DATA BITADDRESSABLE
BITWRD DW 2
BITW   ENDS

BITS   SECTION BIT
BIT0   DBIT
BITS   ENDS

BIT1   BIT BITWRD.0     ; bit 0 of BITWRD
BIT2   BIT BIT0 + 0.1   ; Illegal address
                        ; operation. The '.'
                        ; operator has BIT as result
BIT3  BIT BIT0 + 1      ; BIT0 + 1 word (16 bits)
BIT4  BIT BIT1 + 2      ; bit 2 of BITWRD
BIT5  BIT BITWRD.0 + 3  ; address of BITWRD + 4
                        ; bits + 3 words
```

BLOCK

Synopsis:

name **BLOCK** *description*

Description:

To separate registers in register definition files in logical units, the BLOCK directive is available. The BLOCK directive is used by CrossView Pro and is ignored by the assembler.

Field Values:

name	A unique a166 identifier.
description	A string describing the set of registers in this block.

Examples:

```
CPU BLOCK "System Registers"

GPT BLOCK "General Purpose Timers"
```

CGROUP/DGROUP

Synopsis:

group-name **CGROUP** *sect-name* [, *sect-name*]...

group-name **DGROUP** *sect-part* [, *sect-part*]...

Description:

Because of differences in addressing code and data, two group directives are supported: CGROUP and DGROUP.

CGROUP supports sections of type CODE and DGROUP supports sections of type DATA. Sections of type LDAT, HDAT and PDAT are not allowed with the DGROUP directive.

The GROUP directives can be used to combine several logical sections, so that they are located to the same physical segment or page (all sections will have the same base address). The total size of a group is the sum of the sizes of all sections specified by the GROUP directive. The total size for CODE groups (CGROUP) must fit in one segment. The total size for DGROUP groups must fit in one page. **a166** does not check if the size of a group is correct, this is done by the **l166** locator.

The order of the sections in the GROUP directive is not necessarily the same as the order of the sections in memory after the program is located. This order can be changed at link-time. The *group-name* can be used as if it was a *sect-name*, except in another GROUP directive.

The DGROUP directive also accepts SYSTEM as a *sect-part*. This makes it possible to assume one DPP to both sections and SYSTEM. When SYSTEM is grouped, an ASSUME on the group also assumes SYSTEM, and an ASSUME of SYSTEM also assumes the whole group. For SYSTEM in a group, the assembler generates an absolute WORD aligned DATA section with the name SYSTEM at the address 0C000h. The size of this section is zero. The locator now locates all sections of the group in page 3.

A GROUP directive serves as a 'shorthand' way of referring to a combination of sections. A specified collection of sections is grouped at link-time and can be located as a logical unit to one physical segment or page. The assembler works in terms of sections. When you define a variable or label, the assembler assigns that variable or label to the section in which it was defined. The offset associated with the variable or label is from the base of its own section and not from the base of the group.

If a member of a group is an absolute section (specified with the *align-type* AT ...) then the group is implicitly absolute as well.

Field Values:

group-name is a unique **a166** identifier to be used as the name for the group

sect-name a section name

sect-part a *sect-name* or SYSTEM

Example:

```
CSEC1     SECTION  CODE
          .
          .
CSEC1     ENDS

CSEC2     SECTION CODE
          .
          .
CSEC2     ENDS

CODEGRP   CGROUP   CSEC1, CSEC2   ; Group combination
                                  ; of the CODE
                                  ; sections CSEC1 and
                                  ; CSEC2
```

DB/DW/DDW/DBIT/ DS/DSB/DSW/DSDW

Synopsis:

[*name*]	**DB**	*init* [, *init*]...
[*name*]	**DW**	*init* [, *init*]...
[*name*]	**DDW**	*init* [, *init*]...
[*name*]	**DBIT**	[*number*]
[*name*]	**DS**	*number*
[*name*]	**DSB**	*number*
[*name*]	**DSW**	*number*
[*name*]	**DSDW**	*number*

Description:

The DB (Define Byte), DW (Define Word), DDW (Define Double Word), DBIT (Define BIT) and DS (Define Storage), DSB (Define Storage BYTE), DSW (Define Storage Word) and DSDW (Define Storage Double Word) directives are used to define variables, initialize memory and reserve storage.

Sections with DB, DW, DDW or DBIT directives are located in ROM because initialized data cannot be stored in RAM.

Sections with DS, DSB, DSW or DSDW are located in RAM because ROM data must have a predefined value.

DB Initialize 1 byte in memory. If *init* is a string definition, the characters are stored each in one byte adjacent to another. With this directive strings longer than 2 characters and empty strings are allowed. The maximum string length is 200 characters. The DB directive cannot be used in BIT sections. The symbol type of *name* is BYTE.

DW Initialize a word of memory. If it does not match on an even address, the assembler reports a warning. In this case, the word definition must be aligned with the EVEN directive. However, you can also accept this warning, because the assembler internally provides for a correct alignment. The word value represented by *init*, is placed in memory with the high byte first. Unlike the DB directive, no more than two characters are permitted in a character string, and the null string evaluates to 0000h. The DW directive cannot be used in BIT sections. The symbol type of *name* is WORD.

DDW Initialize a double word (4 bytes) in memory. The assembler reports a warning if this address does not match on an even address. In this case, the EVEN directive can be used to align on an even address. The double word is placed in memory with the high word first, and each word with the high byte first. The symbol type for *name* is WORD because instructions never can have a double word operand. Just like DW only two byte character strings are allowed. The DDW directive cannot be used in BIT sections.

DBIT Bit definition in a section of type BIT. An optional *number* can be used to indicate the number of bits to be reserved. The label [*name*] is assigned to the first reserved bit. **c166** uses the optional number to support bit structures. When a DBIT directive is encountered, the location counter of the current section is incremented by the number of bits specified with the *number*. Initialization with the DBIT directive is impossible. The symbol type of *name* is BIT.

DS Reserve as many bytes (or bits) of memory as you define with the *number* without initializing them. Reserves bytes in DATA and CODE sections and bits in BIT sections. When a DS directive is encountered, the location counter of the current section is incremented by the number of bits specified with the *number*. When a DS directive is used in a non BIT section the symbol type of *name* is BYTE. In BIT sections the symbol type of *name* is BIT.

DSB This is the same as DS. Reserve *number* of bytes or the *number* of bits if used in a BIT section. When the directive is used in a non BIT section the symbol type of *name* is BYTE. In BIT sections the symbol type of *name* is BIT.

DSW This is an extension of DS. It reserves two times the number of bytes defined by *number*, or two times the number of bits if used in a BIT section. When the directive is used in a non BIT section the symbol type of *name* is WORD. In BIT sections the symbol type of *name* is BIT.

DSDW This is an extension of DS. It reserves four times the number of bytes defined by *number*, or four times the number of bits if used in a BIT section. When the directive is used in a non BIT section the symbol type of *name* is WORD. In BIT sections the symbol type of *name* is BIT.

Field Values:

name A unique **a166** identifier. It defines a variable whose attributes are the current section index, the current location counter and a type defined by the data initialization unit.

init Different initialization values are possible depending on the usage and context:

- A constant expression
- 1-byte initialization, a constant expression that evaluates to 8 bits (i.e. 0 to 255 decimal)
- 2-byte initialization, a constant expression that evaluates to 16 bits (i.e. -32768 to +32767 decimal or 0 to 65535 decimal)
- 4-byte initialization, a constant expression that evaluates to 32 bits (i.e. -2147483648 to 2147483647 decimal or 0 to 4294967295 decimal)
- String definition, 0, 1 or 2 bytes long
- An address expression

You can initialize a variable with the offset or segment-number respective page number of a label or variable using the DW directive:

```
DW POF VAR  ; Store the offset of the
            ; variable VAR from its
            ; page begin
DW VAR      ; Has the same effect
```

When you use a section *name* or group *name* in a DW directive, the segment number/page number of that item are stored respectively:

```
DW CSEC1  ; Store the segment number
          ; of CSEC1 section
```

- Initializing with a string (DB only)

  With the DB directive you can define a string up to 200 characters long. Each character is stored in a byte, where successive characters occupy successive bytes. The string must be enclosed within single or double quotes. If you want to include a single or double quote in a string, code it as two consecutive quotes, or use a single quote in a string enclosed within double quotes or vice versa.

```
ALPHABET DB 'ABCDEFGHIJKLMNOPQRSTUVWXYZ'
DIGITS      DB "0123456789"
SINGLEQUOTE DB "This isn't hard"
DOUBLEQUOTE DB 'This isn''t hard also'
```

number Is a constant expression which determines the number of bytes that must be reserved. No initialization is done.

Examples:

- Constant expression - a numeric value

```
TEN     DB 6+4          ; Initialize a byte: 0AH
        DW 10           ; Initialize a word: 000AH
CONSTA  DW"?B"          ; Initialize a word: 3F42H
         ; ^^ constant string of maximum 2 bytes,
         ; evaluated to a number.
LONG1   DDW 012345678h  ; initialize a double word
```

- Indeterminate initialization

```
RESERVE  DS   2    ; Reserve two bytes. This word
                   ; is not aligned.
RESBYTES DSB  4    ; Reserve four bytes.
RESWORDS DSW  2    ; Reserve four bytes.
RESDWRD  DSDW 1    ; reserve four bytes
```

- An address expression - the offset or base part of a variable or label

```
SEGBASE DW  DSEC     ; Store page number of DATA section
COFFSET DW  POF VAR  ; Store offset value of VAR
LBASE   DW  SEG LAB1 ; Store segment number of LAB1
DBASE   DW  PAG VAR  ; Store page number of VAR
ADDR    DDW VAR      ; store full 32 bit address of VAR
```

- An ASCII string of more than two characters - DB only.

```
AMESSAGE  DB "HELLO WORLD"
SOFTWARE  DB  'ASSEMBLER A166'
```

- A list of initializations
  The values are stored at succeeding addresses.

```
STUFF     DB  10, "A STRING", 0, 3, 'R'
;reserve 12 bytes memory

NUMBS     DW  1, 'M', 3, 4, 0FFFFH
;reserve 5 words memory
```

- Bit reservation

```
BSEC   SECTION BIT
FLAG   DBIT     ; reserve one bit
FLAG2  DBIT 4   ; reserve 4 bits
BSEC   ENDS
```

DBFILL/DWFILL/DDWFILL

Synopsis:

[*name*] **DBFILL** *length*, *value*

[*name*] **DWFILL** *length*, *value*

[*name*] **DDWFILL** *length*, *value*

Description:

The DBFILL, DWFILL and DDWFILL directives are used to fill an amount of memory with a specified byte, word, or double word.

DBFILL Fill a memory area of *length* bytes with *value*. If *length* equals 0, a warning is issued stating that no bytes were filled. If *length* is less than 0, an error is issued. The symbol type of *name* is BYTE.

DWFILL Fill a memory area of *length* words with *value*. Words will not necessarily be word aligned in memory. If *length* equals 0, a warning is issued stating that no bytes were filled. If *length* is less than 0, an error is issued. The symbol type of *name* is WORD.

DDWFILL Fill a memory area of *length* double words with *value*. Double words will not necessarily be double word or word aligned in memory. If *length* equals 0, a warning is issued stating that no bytes were filled. If *length* is less than 0, an error is issued. The symbol type of *name* is WORD.

Field Values:

name A unique **a166** identifier. It defines a variable whose attributes are the current section index, the current location counter and a type defined by the data.

length Defines the number of bytes, words or double words to be filled.

value The byte, word or double word value you want to fill the memory area with.

Examples:

- Fill a fixed amount

```
DWFILL  16, 0ffffh          ; Fill 16 words with 0ffffh
```

- Filling up to a specific address

```
DBFILL  256-$, 0aah         ; Output 0aah until address
                            ; 256 is reached
```

- Aligned filling

```
DBFILL  (($&3)+3)>>2,01h    ; Fill bytes until a double
DBFILL  (($&3)+3)>>2,02h    ; even address is reached
DBFILL  (($&3)+3)>>2,03h    ;
DDWFILL 4,04040404h         ; Proceed to fill 4 double
                            ; words
```

DEFR/DEFA/DEFX/DEFB/ DEFVAL

Synopsis:

name **DEFR** *SFR-address*[[,*attr*][,*method*,*reset*[,*comment*]

name **DEFA** *system-addr*[[,*attr*][,*method*,*reset*[,*comment*]

name **DEFX** *address*[[,*attr*][,*method*,*reset*[,*comment*]

name **DEFB** *bit-address*[,*attribute*[,*comment*]]

name **DEFBF** *SFR*,*bit-offset*,*bit-offset*[,*attribute*]

DEFVAL *SFR*,*bit-offset*,*bit-offset*[,*attribute*]

Description:

The directives mentioned above serve to define REG names, system-address names and bit names with the attributes read, write, or read/write (default). These definitions are pure system definition and do not appear in the symbol table of the list files.

The DEFR/DEFA/DEFX/DEFB directives are mainly used to define system names in a STDNAMES standard configuration file (see control STDNAMES). These directives can also be used, however, in the source file.

The DEFBF and DEFVAL directives are ment to be used by CrossView Pro and are ignored by the assembler.

The DEFB directive can be used only for defining bits in the *bit-address*able system range (SFR range). For the definition of bits in the *bit-address*able internal RAM range, use the BIT directive.

The *system-address*es, defined with the DEFA directive, must be in the internal RAM range from 0C000h to 0FFFEh.

The *address*, defined with the DEFX directive, may be anywhere in memory. Please note that using a DEFX defined address requires explicitely specifying the correct DPP register upon use.

Field Values:

name A unique **a166** identifier. This is a REG name, address name or bit name.

SFR-address An SFR address (0FE00h - 0FFDEh extended with 0F000h - 0F1DEh for EXTSFR).

system-address A 16-bit address (*address* in the system page 0C000H - 0FFFEH). PEC pointer addresses may not be used.

bit-address This is the bit address represented as:
{SFR name | SFR *address*}.Bit number (0 - 15)

attribute The following attributes are available:

R	(read only)
W	(write only)
RW	(read and write) default.

method EDE initialisation method. Disregarded by the assembler

reset the reset value of this register.
Disregarded by the assembler

comment a descriptive comment for this register.
Disregarded by the assembler.

SFR the name of a register previously defined through DEFR or DEFA

bit-offset start and end bit number of the bitfield.
Disregarded by the assembler.

value value of the associated bit or bitfield and its meaning.
Disregarded by the assembler.

The following system names are defined internally by the assembler. You cannot (re-)define them with these directives:

- Non Bit-Addressable Registers:

  DPP0, DPP1, DPP2, DPP3, CSP, MDH, MDL, CP, SP,
  QX0*, QX1*, QR0*, QR1*, MAH*, MAL*

  * = only available for EXTMAC or EXTEND2 architectures

- Bit-addressable Registers:

  PSW, MDC, ZEROS, ONES, MSW*, MRW*, MCW*, IDX0*, IDX1*

  * = only available for EXTMAC or EXTEND2 architectures

- System bits:

NOEXTEND2		EXTEND2	
Name	**Address**	**Name**	**Address**
N	PSW.0	N	PSW.0
C	PSW.1	C	PSW.1
V	PSW.2	V	PSW.2
Z	PSW.3	Z	PSW.3
E	PSW.4	E	PSW.4
MULIP	PSW.5	MULIP	PSW.5
USR0	PSW.6	USR0	PSW.6
		USR1	PSW.7 *
HLDEN	PSW.10	HLDEN	PSW.10
IEN	PSW.11	IEN	PSW.11

Table 7-2: Internally defined system bits

* The bits in PSW with NOEXTEND2 are different with EXTEND2.

Examples:

```
ADDAT   DEFR  0FEA0h, R ; define ADDAT to be SFR
                        ; address 0FEA0h (read only)

MYSYS   DEFA 0FBE0h, W  ; define MYSYS as system
                        ; address 0FBE0h to be write only

CANA_CR DEFX 0x200200,,"NONE",0x0000,
             "CAN Node A Control"

ABC     DEFB 0FF20h.0   ; define ABC to be bit 0 of
                        ; address 0FF20h in the bit-
                        ; addressable SFR area (r/w)
```

DSPTR/DPPTR/DBPTR

Synopsis:

[*name*] **DSPTR** *init* [, *init*]...

[*name*] **DPPTR** *init* [, *init*]...

[*name*] **DBPTR** *init* [, *init*]...

Description:

Pointers are memory units in which complete physical addresses of variables, labels or procedures are stored. Pointers are used essentially to supply parameters to procedures. They are used in particular in conjunction with the **c166** compiler. Pointers can be defined by means of the memory addressing directives DSPTR (Define Segment Pointer), DPPTR (Define Page Pointer), and DBPTR (Define Bit Pointer).

DSPTR Segment pointer initialization. Used to define variables that hold pointers to labels or procedures in code sections.

DPPTR Page pointer initialization. Used to define variables that hold pointers to variables of type BYTE or WORD in data sections.

DBPTR Bit pointer initialization. Used to define variables that hold pointers to bit variables in bit sections or bit-addressable data sections.

When a pointer is defined, it can be assigned a symbolic *name* by which this pointer can be addressed.

The pointers can be useful in SEGMENTED mode to obtain the segment- or page offset and the segment- or page number of a variable or label to access the variable/label from another segment or page, when you don't know the absolute address of the variable or label.

Field Values:

name This is a unique **a166** identifier. It defines a variable whose attributes are the current section index, the current location counter and the type WORD.

init DSPTR and DPPTR can be initialized with a variable *name* or label *name*. The assembler allocates two words of memory and initializes them as follows:

DSPTR With this directive the first word contains the segment offset of the label (a value in the range 0000H to FFFFH corresponding to a 16-bit number) and the second word contains the physical segment number of that item (a value in the range 0000H to 00FFh corresponding to a 8-bit number for the C16x/ST10).

DPPTR With this directive the first word contains the page offset of the variable or label (a value in the range 0000H to 3FFFH corresponding to a 14-bit number) and the second word contains the physical page number of that item (a value in the range 0000H to 07FFh corresponding to a 10-bit number for the C16x/ST10, depending on the EXTMEM control).

DBPTR can be initialized with a bit variable *name*. The assembler allocates three words of memory and initializes them as follows:

DBPTR With this directive the first word contains the bit position (a value in the range 0000H to 000FH), the second word contains the page offset of the bit variable (a value in the range 0D00H to 0DFFH) and the last word contains the physical page number 0003H.

Examples:

```
LABPTR  DSPTR LAB       ; Segment Pointer to label LAB
                        ; LABPTR contains the segment
                        ; offset off LAB, and LABPTR + 2
                        ; contains the segment number of  LAB
VARPTR  DPPTR VAR       ; Page Pointer to variable VAR
BITPTR  DBPTR BITVAR    ; Bit Pointer to a bit variable
BITPTR1 DBPTR BITWORD   ; Bit Pointer to a bitaddressable word
```

Example where DPPTR is used to allow initialization of a variable:

```
$SEGMENTED
EXTERN AVAR:WORD
_IR         SECTION DATA WORD PUBLIC 'CINITROM'
_IR_ENTRY   LABEL  BYTE     ; define a label location
                             ; (see LABEL directive)
            DW    AVAR
_IR         ENDS


C166_INIT   SECTION DATA WORD GLOBAL 'CROM'
            DW    06H
            DPPTR _IR_ENTRY ; the page offset and number of the
                            ; _IR_ENTRY label location is now
                            ; available. By this, also the word
                            ; following the _IR_ENTRY label can
                            ; be accessed.
            DW    010H
            .
            .
C166_INIT   ENDS
```

END

Synopsis:

END

Description:

The END directive is required in all **a166** module programs. It is, appropriately, the last statement in the module. Its occurrence terminates the assembly process. Any text found behind the END directive is ignored.

Characters following the END directive result in a warning on level 2.

Example:

```
DSEC  SECTION  DATA
AVAR  DW  2
DSEC  ENDS

CSEC  SECTION  CODE
       .
       .
CSEC  ENDS

      END     ; End of assembler source

This line is ignored by a166.
```

EQU

Synopsis:

equ-name **EQU** *expression*

Description:

EQU assigns the value of *expression* to the *equ-name*. This name cannot be redefined.

Field Values:

equ-name This is a unique **a166** identifier.

expression Is any expression.

Example:

```
COUNT  EQU  0FFH  ; COUNT is the same as 0FFH

CSEC  SECTION CODE
      MOV R0, #COUNT
CSEC  ENDS
```

EVEN

Synopsis:

EVEN

Description:

The EVEN directive ensures that the code or data following the use of the directive is aligned on a word boundary. **a166** inserts a DB 0 (00H) in a CODE section, or a DS 1 in a DATA, LDAT, PDAT or HDAT section, if it is necessary, to force the word alignment. The EVEN directive cannot be used in a byte or bit aligned section - an error message is issued.

Examples:

```
DSEC  SECTION DATA  ; DATA section, default
                    ; word aligned
ABYTE DB 'R'        ; one byte. location
                    ; counter is on an odd
                    ; address
EVEN                ; Location counter is
                    ; incremented by one.
AWORD DW 34         ; AWORD start on an EVEN
                    ; address.
DESC  ENDS
```

EXTERN/EXTRN

Synopsis:

EXTERN [**DPP***x***:**] *name***:** *type* [, [**DPP***x***:**] *name***:** *type*]...

or

EXTRN [**DPP***x***:**] *name***:** *type* [, [**DPP***x***:**] *name***:** *type*]...

Description:

The EXTERN directive specifies those symbols, which may be referenced in the module that have been declared 'public' in a different module. The EXTERN directive specifies the *name* of the symbol and its *type*.

Field Values:

DPP*x* — A Data Page Pointer register: DPP0, DPP1, DPP2, DPP3.

name — The *name* of the symbol declared to be public in a different module.

type — The type of the symbol. This field can have the following values:

BIT	- specifies a variable (1 bit)
BYTE	- specifies a variable (8 bits)
WORD	- specifies a variable (16 bits)
BITWORD	- specifies a variable (16 bits)
NEAR	- specifies a near label
FAR	- specifies a far label
DATA3	- specifies a constant (3 bits)
DATA4	- specifies a constant (4 bits)
DATA8	- specifies a constant (8 bits)
DATA16	- specifies a constant (16 bits)
INTNO	- specifies a symbolic interrupt number
REGBANK	- specifies a register bank name (DPP*x* not allowed!)

Example:

Module A, Task A

```
PUBLIC AVAR      ; AVAR is declared public
GLOBAL BVAR      ; BVAR is declared global

DSEC SECTION DATA
     .
     .
AVAR DW 8        ; AVAR is defined here
BVAR DB 4        ; BVAR is defined here
     .
DSEC ENDS

CSEC SECTION CODE
     ASSUME DPP2:AVAR
     .
CSEC ENDS
```

Module B, Task A

```
EXTERN DPP2:AVAR:WORD ; extern declaration

CSEC SECTION CODE
     .
     .
     MOV R0, AVAR     ; AVAR is used here
     .
CSEC ENDS
```

Module A, Task B

```
EXTERN BVAR:BYTE      ; extern declaration

CSEC SECTION CODE
     .
     .
     MOV R0, BVAR     ; BVAR is used here
     .
CSEC ENDS
```

By using the DPPx operator with the EXTERN directive, the assembler assumes that the DPP register is loaded with the right page number to access this variable. This is comparable with the EXTERN directive on this variable. The DPPx assigned to the variable with the EXTERN directive is known throughout the whole source file and cannot be overruled using the ASSUME directive. In the module where the variable is declared PUBLIC or GLOBAL, the variable must be assigned to the DPPx by means of the ASSUME directive.

It is also possible to define and reference a variable in the same module. The type of the reference and the definition will be checked. The definition of a variable will overrule the extern reference of the variable.

Example:

```
EXTERN     IDENT:WORD    ;reference ident
PUBLIC     IDENT         ;ident is declared public

EXAMPLE    SECTION   DATA
       .
       .
IDENT  dsw 1  ;ident is defined here as word
       .
EXAMPLE    ENDS
```

This behavior is very useful for making an include file with all variables referenced as extern. This file can be included in all modules without getting conflicts, with the module that defines the variable. Another benefit is that the EXTERN declaration is type check against these definitions.

GLOBAL

Synopsis:

GLOBAL *name* [, *name*]...

Description:

With the GLOBAL directive you can specify which symbols in the module are available to other modules of the same task or different tasks at link-time. These symbols, which may be defined GLOBAL are:

- variables
- labels or
- constants defined using the EQU or BIT directive.

All other symbols will be flagged as an error. Each symbol name may be declared GLOBAL only once in a module. Any symbol declared GLOBAL must have been defined somewhere else in the program. GLOBAL symbols can be accessed by other modules if the same symbol name has been declared EXTERN in that module.

See the EXTERN directive section.

Field Values:

name This is a user-defined variable, label or constant.

Examples:

Module A, Task A

```
GLOBAL AVAR            ; AVAR is declared global

DSEC   SECTION DATA
       .
       .
AVAR   DW 8             ; AVAR is defined here
       .
DSEC   ENDS
```

Module A, Task B

```
EXTERN AVAR:WORD   ; extern declaration

CSEC   SECTION CODE
       .
       .
MOV    R0, AVAR    ; AVAR is used here
       .
CSEC   ENDS
```

LABEL

Synopsis:

'Code' labels can be defined by:

label: **LABEL** {**NEAR** | **FAR**}

'Data' labels can be defined by:

label **LABEL** {**BYTE** | **WORD**}

or

label **LABEL BIT**

Description:

A *label* is a symbolic *name* for a particular location in a section. There are two different types of labels:

- 'Code' labels, ending with a ':' *label*:
- 'Data' labels *label*

The LABEL directive creates a *label* for the current location of assembly, whether data or code. The LABEL directive can be used to define a variable or a label (depending on the type used) that has the following attributes:

Section: the index to the section being assembled.

Offset: the current value of the location counter.

Type: the operator applied to the LABEL directive. This type can have one of the following values:

BIT	defines a variable of *type* bit
BYTE	defines a variable of *type* byte
WORD	defines a variable of *type* word
NEAR	defines a label of *type* near
FAR	defines a label of *type* far

a166 reports a warning if NEAR/FAR labels are used in DATA sections and also if BYTE/WORD labels are used in CODE sections.

The *'label* LABEL BIT' statement can only be used in BIT sections. **a166** reports an error when it is used in non bit addressable sections.

See sections *Defining Code Labels* and *Defining Data Labels* in chapter *Software Concept* for defining labels without the LABEL directive.

Example:

The LABEL directive is useful for defining a different label name with possibly a different type for a location that is named through the usual means. For example, if you desire to access two consecutive bytes as both a word and as two different bytes, the following usage of the LABEL directive allows both forms of access.

```
DSEC        SECTION  DATA
AWORD       LABEL    WORD   ; label of type WORD
LOWBYTE     DB  0
HBYTE       LABEL    BYTE   ; label of type BYTE
HIGHBYTE    DB  0
DSEC        ENDS
```

Example:

The LABEL directive can also be used to define two labels of different types for the same location of code. This is useful to enable both NEAR and FAR jumps to a CODE section.

```
CSEC        SECTION  CODE
PR          PROC  NEAR
LABFAR:     LABEL  FAR    ; a label of type FAR
LABNEAR:    MOV R0, R1    ; a label of type NEAR,
                          ; same location code
                          ; as LABFAR
PR          ENDP
CSEC        ENDS
```

Examples:

The LABEL directive supports also the BIT type. The LABEL directive with the BIT type can only be used in sections of type BIT.

```
DSEC        SECTION  BIT
FIRSTBIT    LABEL BIT     ; label of type bit
BITS        DBIT  4
DSEC        ENDS
```

LIT

Synopsis:

lit-name **LIT** *'lit-string'*

Description:

This directive is used to substitute text. It only replaces tokens. If you want to replace a substring, enclose the substring in {}. The *lit-name* can not be defined as PUBLIC. The *lit-names* are not replaced in the list file.

Field Values:

lit-name A unique **a166** identifier.

lit-string A character string enclosed in '' or "".

Examples:

```
ALAB   LIT 'ALABEL'
COUNT  LIT "R0"

ALAB:  MOV COUNT, 10 ; Becomes: ALABEL: MOV R0, 10

SYSTEM LIT 'VARIABLE'

{SYSTEM}NAME:     ; Is converted to VARIABLENAME:
```

NAME

Synopsis:

NAME *module-name*

Description:

The NAME directive is used to identify the current object module with a *module-name*. Each module that must be linked to others must have a unique *module-name*. If a *module-name* is not a unique name, the symbols of the second and further modules in the same task cannot be accessed under this name when a debugger or an emulator is used. This directive also accepts reserved words as an argument, for example NAME ret is also allowed. **a166** accepts any identifier as a valid name.

If no NAME directive is used, the default object *module-name* is the source file name stripped of its extension. For example if the source file name is MyProg.src, the object *module-name* is MYPROG.

Field Values:

module-name A unique identifier.

Examples:

```
name My_Program_Name ; module-name is MY_PROG_NAME
```

ORG

Synopsis:

ORG *expression*

Description:

The ORG directive can be used for controlling the location counter within the current section. The ORG directive sets the location counter to the desired value relative to the section's start address. Be very careful not to overwrite any previously allocated data or code by ORGing to a location previously allocated. The ORG directive is used to locate code or data at a particular location (offset) within a section. Used within an absolute section, you can specify the actual location in memory in which the code or data must be located. When used at the beginning of a task you can change the start address of the program (a new program origin).

The above applies only to the current part of a section. If a section continues throughout several modules, the length of the preceding section parts is added to ORG.

If the result of the *expression* is greater than 65536, the assembler reports an error.

Field Values:

expression This is an *expression* that is evaluated modulo 65536. You may use the value of the current location counter in an *expression*. The value must not be smaller than the absolute start address of the section.

Examples:

```
; example 1
CODESEC  SECTION CODE   ; main code section
         ORG 10H        ; start address changed to 10H
         .
         .
CODESEC  ENDS

; example 2
ORG ($ + 1000)    ; the current location
                  ; counter is incremented by 1000
```

```
; example 3
ABSSEC   SECTION CODE AT 020000H   ; absolute section
FARPROC  PROC FAR
         .
         .
         ORG 20400HH          ; current location counter
         .                    ; changed to 20400H
         .
         RET
FARPROC  ENDP
ABSSEC   ENDS
```

Avoid an *expression* in the form:

ORG ($ - 1000)

because this will overwrite your last 1000 bytes of assembly (or will reORG high in the current section, if the *expression* evaluates to a negative number).

PECDEF

Synopsis:

PECDEF *channel-range* [, *channel-range*]...

Description:

With the PECDEF directive you can specify which PEC (Peripheral Event Controller) channels must be used. Only one PECDEF directive is allowed per module. There are 8 PEC service channels implemented in the C166/ST10, each supplied with a separate PEC Channel Counter/Control register. They are referred to as PECC*n*, where *n* represents the number of associated PEC channel (*n*= 0 through 7).

The PECDEF directive causes the locator to reserve memory for each defined PECC*n*. The address range for PEC pointers is: 0FCE0h - 0FCFEh.

The assembler issues the error "invalid PECDEF operand" when the PECC*n* register is unknown. The PECC*n* registers are defined in the register definition files `regcpu.def`. These register definition files can be read by using the STDNAMES control.

See section 8.4, *Differences between C16x/ST10 and XC16x/Super10*, for PEC pointer differences.

Field Values:

channel-range This field represents one PEC channel PECC*n*, or a range of PEC channels in the form PECC*n*-PECC*m*, where *n* < *m* and both *n* and *m* must be in the range 0 to 7.

Example:

```
PECDEF PECC0 - PECC2, PECC6

; use channels 0, 1, 2 and 6
```

PROC/ENDP

Synopsis:

name **PROC** [*type*]

.
.

name **ENDP**

or

name **PROC TASK** [*taskname*] [**INTNO** {[*int.-name*][**=***int.-no.*]}]
[**SCALING** *scale* [**INLINE**]]

.
.

name **ENDP**

or

name **PROC TASK ISR**

.
.

name **ENDP**

Description:

A PROC directive can be used to define a label and to group a sequence of instructions that are usually interpreted to be a subroutine (procedure) that is CALLed either from within the same physical segment (near) or from a different physical segment (far).

The PROC TASK directive must be used to define a task. A task is defined in a main module. When the STRICTTASK control is set, only one PROC TASK definition is allowed per assembly module. When the NOSTRICTTASK control is set (default) there is no limit to the number of PROC TASK definitions. The task procedure may be given an interrupt number (INTNO). The interrupt number is used by the locator to automatically generate an interrupt vector table.

The primary use of the PROC directive is to give a *type* to the RET instruction enclosed by the PROC/ENDP pair. A PROC is different from a high-level language subroutine or procedure in that there is no scoping of *names* in a PROC. All user defined variables and labels in a module must be unique.

The C166/ST10 has three *types* of RET instructions: near, far or an interrupt return, that corresponds to the type of the CALL made.

When PROC TASK ISR is used, the procedure can exit using a RETI instruction although it is not an actual interrupt. This is used to call interrupt service routines (ISR) from inlined vectors.

INLINE indicates to the locator to insert this procedure in the vector table if possible.

Field Values:

name This is a unique **a166** identifier that defines a label whose section attribute is the current section index, and whose offset is the current location counter. Its *type* is defined in the PROC directive.

type This specifies the *type* of the label defined. The possible values are:

Not specified	defaults to NEAR in non-segmented mode and to FAR in segmented mode
NEAR	to define a near procedure
FAR	to define a far procedure

This field specifies to the assembler what type of call instruction to generate for the procedure and what type of return instruction to generate for any RET instruction found between the PROC/ENDP pair.

task-name This is a unique **a166** identifier that defines the *name* of the task represented by this interrupt procedure.

int.-name This is a unique **a166** identifier that defines a symbolic *name* for the interrupt number of the specified interrupt procedure. This symbolic interrupt number is used in the TRAP instructions to execute a task procedure.

int.-no. This is a numeric expression in the range 0 - 127. It represents the interrupt number (*int.-no.*) of the specified interrupt procedure. This interrupt number (*int.-no.*) can be used in the TRAP instructions to execute a task procedure.

scale Scaling to be used to fit this vector in the vector table. The assembler does not check if the resulting procedure does actually fit inside the specified scaling if INLINE is specified.

Examples:

1. A NEAR PROC example

```
LOCALCODE  SECTION CODE  PUBLIC

ANEARPROC  PROC  NEAR
           .
           .
           RET             ; A near RET
ANEARPROC  ENDP
           .
           .
           .
           CALL ANEARPROC  ; A near CALL
           .
LOCALCODE  ENDS
```

2. A FAR PROC example

```
GLOBALCODE SECTION CODE

AFARPROC   PROC FAR        ; a far procedure
           .
           .
           RET             ; A far RET
AFARPROC   ENDP

GLOBALCODE ENDS

SPECSEC    SECTION CODE
           .
           .
           CALL AFARPROC   ; A far CALL
                           ; intra segment.
           .
SPECSEC    ENDS
```

3. Interrupt routine with absolute interrupt number specification

```
PUBLIC INITROUTINE

CODESEC SECTION CODE

INITROUTINE PROC TASK INTNO=0 ; Task definition
            .
            .
            RET  ; Return from interrupt
INITROUTINE ENDP

CODESEC ENDS
```

4. Inline vector calling interrupt service routine

```
PUBLIC         INLINE_VECTOR
PUBLIC         ISR_VECTOR

INTSECT        SECTION CODE

INLINE_VECTOR PROC TASK INTNO=2 SCALING 1 INLINE

               PUSH CP
               JMPS SEG ISR_VECTOR, ISR_VECTOR
               RETV

INLINE_VECTOR ENDP

INTSECT ENDS


CODESECT SECTION CODE

ISR_VECTOR PROC TASK ISR

               .

               .
               RETI

ISR_VECTOR ENDP

CODESECT ENDS
```

PUBLIC

Synopsis:

PUBLIC *name* [, *name*]...

Description:

With the PUBLIC directive you can specify which symbols in the module are available to other modules of the same task at link-time. These symbols, which may be defined PUBLIC are:

- variables
- labels
- constants defined using the EQU or BIT directive (the EQU expression must represent a variable or a label)

All other symbols will be flagged as an error. Each symbol name may be declared PUBLIC only once in a module. Any symbol declared PUBLIC must have been defined somewhere else in the program. PUBLIC symbols can be accessed by other modules if the same symbol name has been declared EXTERN in that module.

See the EXTERN directive section.

Field Values:

name This is a user-defined variable, label or constant.

Examples:

Module A

```
PUBLIC AVAR     ; AVAR is declared public

DSEC    SECTION DATA
        .
        .
AVAR    DW 8    ; AVAR is defined here
        .
DSEC    ENDS
```

Module B

```
EXTERN AVAR:WORD     ; extern declaration

CSEC   SECTION CODE
       .
       .
       MOV R0, AVAR  ; AVAR is used here
       .
CSEC   ENDS
```

REGDEF/REGBANK/ COMREG

Synopsis:

[*register-bank-name*]	**REGDEF**	[*register-range* [*type*]] [, *register-range* [*type*]]...
[*register-bank-name*]	**REGBANK**	[*register-range*] [, *register-range*]...
com-reg-name	**COMREG**	*register-range*

Description:

REGDEF The REGDEF directive is used to define or declare a register bank. A *register-bank-name* is a name which can be assigned to a memory range in the internal RAM holding the GPRs, specified by the *register-range* which may be used in this module and the modules the register bank is combined with. If the *register-range* is omitted the complete register range (R0 - R15) is taken as default.

REGBANK The REGBANK directive is used to define or declare a register bank which has a PRIVATE *register-range*. This means that you can use the *register-range* only in this module and the modules the register bank is combined with. If the *register-range* is omitted the register-bank contains no register.

COMREG The COMREG directive is used to define a register bank which has a COMMON *register-range*.

A register bank **definition** is a REGDEF or REGBANK directive **with** a *register-bank-name*. The linker combines register bank definitions with equal names.

A register bank **declaration** is a REGDEF or REGBANK directive **without** a *register-bank-name*. The assembler combines all declarations in the input module to one declaration. The assembler combines all definitions with the declarations and issues a warning if registers in the declaration are not in a definition and the definition is expanded accordingly.

If registers are used in a module, a register bank declaration or definition must be present in that module. If no register bank declaration or definition is used, or if registers not contained in the register bank declaration are used, **a166** reports a warning message. When a REGDEF directive was used the *register-range* description is expanded accordingly. So only registers that are missing in the definition are added. When a REGBANK directive was used, the *register-range* is not expanded. When neither a REGDEF nor a REGBANK directive was used, **a166** does not generate a register bank.

REGDEF, REGBANK and COMREG directives cannot be used in ABSOLUTE mode. The register bank cannot be located since the code must be loadable first.

When the STRICTTASK control is set, only one REGDEF or REGBANK directive is allowed per module.

Field Values:

register-bank-name
is the name for a register bank. It can be any unique **a166** identifier.

com-reg-name
is the name for a COMMON register range. It can be any unique **a166** identifier.

register-range
is the register range defined in the following form:

```
Rn [- Rm]  n < m
```

Rn is a single register or the beginning of a register range and Rm is the end of a register range. Rn and Rm are registers in the range R0 to R15.

type
is one of the following *register-range* types:

PRIVATE	the *register-range* is private and can only be combined with register banks with the same *register-bank-name*.

COMMON=*name* the specified register areas are common and can be used to overlap banks partially. *name* is the name of the COMMON *register-range*.
When *name* is used as reference it is translated to the last register bank definition in the source module in which this COMMON *name* exists.

Examples for register bank definitions

Example 1

```
RBank REGDEF  ; Register bank with 'RBank' as
              ; register bank name and R0 to R15
              ; (16 registers) as register range of
              ; type PRIVATE.
```

Is the same as:

```
RBank REGBANK R0-R15
```

Example 2

```
RBANK1 REGDEF R0-R5 PRIVATE  ; Register range with 6
                             ; PRIVATE registers
```

Example 3

```
RBANK2 REGDEF R1-R6 PRIVATE, R7-R9 COMMON=RCOM
```

Is the same as:

```
RBANK2 REGBANK R1-R6
RCOM   COMREG  R7-R9
```

Example 4

```
RBANK3 REGDEF R0-R3  COMMON=COM1,
       R4-R8, R9-R12 COMMON=COM2
     ; ^ register range type PRIVATE
```

Examples for register bank declarations

```
REGDEF
; This is a default REGDEF. Register bank with all 16
; registers (R0 to R15) of type PRIVATE.

REGDEF R0-R3, R4-R5 COMMON=CREG
; R0-R3 is PRIVATE; R4-R5 is COMMON
```

```
REGDEF R1-R4 COMMON=COMR1, R6-R10, R14 COMMON=COMR2
```

Example with reference to COMMON name:

```
      REGDEF   R4 COMMON = AA
RB1   REGDEF   R0-R3
RB2   REGBANK  R5-R6
      ...
      MOV CP, # AA    ; translated to MOV CP, #RB2
      ...
```

Combination of register banks by linker/locator

The linker uses the following algorithm for combining register banks:

1. All register bank declarations of all input modules are combined when more than one declaration exists.
2. The combined declaration (if any declaration exists) is combined with the register definitions of all modules.
3. All register bank definitions with equal names are combined. Combining PUBLIC or GLOBAL register banks with another local, PUBLIC or GLOBAL register bank with equal name is not allowed.

   When register definitions or declarations are combined, overlapping or mismatching COMMON register ranges result in an error message.

   The linker generates the combined register banks in the output file. A declaration is only generated when no definitions exist.

The locator uses the following algorithm for combining register banks:

1. Register bank definitions having COMMON ranges with equal names are combined.
2. Register bank definitions having equal names are combined to one bank. This is not done when the STRICTTASK control is set.
3. Register bank declarations are not combined to other registerbank declarations, unless matching COMMON ranges exist or when rule 4. can be applied.

4. When an EXTERN NEAR or FAR is resolved by a GLOBAL NEAR or FAR symbol from a module, the locator assumes that the GLOBAL is a procedure which is called by the EXTERN. To be sure that the register bank of the caller (the EXTERN) contains all registers which can be used by the callee (the GLOBAL), all registers which exist in register banks of the module of the callee but do not exist in the register banks in the module of the caller are added to the register banks of the caller as private registers (see example A.). This combination is not done when the STRICTTASK control is set.

   When register definitions or declarations are combined, overlapping or mismatching COMMON register ranges result in an error message.

Example A

file `mod1.src`:

```
RB1     REGDEF  R5,R7,R10-R15
RB2     REGDEF  R4,R7
        ...
        GLOBAL  PROC1
PROC1   PROC    NEAR
                ...
PROC1   ENDP
                ...
        END
```

file `mod2.src`:

```
RB      REGDEF  R1,R3,R10-R12
        ...
        EXTERN  PROC1:NEAR
        ...
        CALL    PROC1
        ...
        END
```

Invocations:

```
a166 mod1.src
a166 mod2.src
l166 locate mod1.obj mod2.obj to mod.out
```

The three resulting register banks:

```
RB1  R5 R7 R10-R15
RB2  R4 R7
RB   R1 R3 R4 R5 R7 R10-R15
```

The bank RB now also contains all registers of RB1 and RB2 because `mod1.src` which contains RB1 and RB2 is called from `mod2.src` which contains RB. The called procedure PROC1 now can safely use all registers which are defined in its register bank.

COMMON and PRIVATE register ranges

COMMON and PRIVATE *register-ranges* may not be conflicting. If a *register-range* has been defined COMMON in one module, this *register-range* must not be declared PRIVATE in other modules, and vice versa.

COMMON *register-ranges* with the same name must be identical in all modules of the tasks in which they are used:

Example:

```
Module A:
RBANK REGDEF R0-R2 COMMON=COM1, R3-R6 COMMON=COM2, R7-R9

Module B:
RBANK REGDEF R0-R2 COMMON=COM1, R7-R9 PRIVATE
          ;  ^ same common register-range as in module A

Module C:
      REGDEF R3-R6 COMMON=COM2, R7-R8
          ;  ^ same common register-range as in module A
```

COMMON *register-ranges* with the same name that are used in several tasks must be equal in size.

PRIVATE and COMMON *register-ranges* of several tasks must be organized in such a way that the same memory area can be allocated to the COMMON *register-ranges* with the same name without violating the PRIVATE and COMMON register banks of the tasks.

Examples:

```
Task X:
RBANKX REGDEF R0-R3 COMMON=XYZ, R4-R7, R8- R9 COMMON=XZ
;              ^ 4 registers             ^ 2 registers
```

```
Task Y:
RBANKY REGDEF R0-R5 PRIVATE, R7-R10 COMMON=XYZ
;                                ^ 4 registers

TASK Z:
RBANKZ REGDEF R2-R5 COMMON=XYZ, R10-R11 COMMON=XZ, R12-R15
;             ^ 4 registers     ^ 2 registers
```

An example register layout for the three tasks above is given by the following part of the locator map file:

Part of locator map file

```
Register banks: combination of register definitions

     Reg. bank 0
     012345-####4567##CDEF--
     ^      ^   ^   ^ ^
     |      |   |   | |.... RBANKZ (Z) ...... FA22h
     |      |   |   |...... XZ ............... FA1Eh
     |      |   |.......... RBANKX (X) ...... FA16h
     |      |............... XYZ ............. FA0Eh
     |...................... RBANKY (Y) ...... FA00h
```

The paragraph *Registers* in chapter 1, *Software Concept*.

SECTION/ENDS

Synopsis:

name **SECTION** *section-type* [*align-type*] [*combine-type*] ['*class*']

.
.

name **ENDS**

Description:

With this directive a logical section can be defined. This section may be combined with other sections in the same module and/or with sections defined in other modules. These sections form the physical segments for code or physical pages for data, located in memory. The code or data is placed within the SECTION/ENDS pair. Within a source module, each occurrence of an equivalent SECTION/ENDS pair (with the same name) is viewed as being one part of a single program section.

Field Values:

name This is the name of the section. The name must be a unique **a166** identifier.

section-type The following section types can be used:

Section Type	Description
CODE	This section is mapped by the locator to a physical segment. If the assembler operates in NON-SEGMENTED mode (default) the code can only be in the first segment of 64K. An exception to this rule is when the MODEL control is set to SMALL. In that case the code can be anywhere in memory. If the assembler operates in SEGMENTED mode the code can be anywhere in memory.
DATA	This section is mapped by the locator to a physical page (16K). If the assembler operates in NON-SEGMENTED mode (default) the page can only be in the first segment of 64K. If the assembler operates in SEGMENTED mode the page can be anywhere in memory.

Section Type	Description
LDAT	This Linear DATa section is mapped by the locator in the first segment of 64K. No checking on 16K page boundaries will be done. The LDAT section type can only be used in NON–SEGMENTED mode. An LDAT section size is less than or equal to 64K. If the MODEL control is set to SMALL, it is also possible to locate LDAT sections outside the first segment in NON–SEGMENTED mode. It is possible to manipulate LDAT sections outside the first segment with the locator control ADDRESSES LINEAR.
PDAT	This Paged DATa section is mapped by the locator in one page anywhere in memory. If the assembler operates in NON– SEGMENTED mode the PDAT section type is the same as the DATA section type in SEGMENTED mode. That is why the PDAT section type should only be used in NON–SEGMENTED mode. A PDAT section size is less than or equal to 16K.
HDAT	This Huge DATa section specifies a non–paged section (no checking on 16K page boundaries and even no checking on 64K segment boundary!) anywhere in memory.
BIT	This section will be mapped by the locator to bit–addressable memory (0FD00h – 0FDFFh). In these sections the location counter is incremented in bit units. All symbols defined in a BIT section get the BIT type.

Table 7-3: Section types

align-type This alignment type field specifies on what boundaries in memory the section will be located. In combination with AT, the *align-types* are used to check the specified absolute address for the desired alignment, and to force alignment of sections by the linker/locator.

Align Type	Description
Not specified	The default value of word alignment is taken for non–bit sections and bit alignment for bit sections.
BIT	Sections start at a bit address.
BYTE	Sections may start at any address.
WORD	Sections start at an even address (least significant bit equals 0).
DWORD	Double word. Sections start at an even address with the two least significant bits equal to 0).
PAGE	Sections start at a page boundary (module 16K).

Align Type	Description
SEGMENT	Sections start at a segment boundary (module 64K).
BITADDRESSABLE	Sections start at an even address (word alignment) in the bit-addressable RAM (0FD00h - 0FDFEh).
PECADDRESSABLE	Sections start at an even address (word alignment) in the first segment in pec-addressable RAM (segment 0). The PEC pointers are located at address range 0FDE0h - 0FDFEh, unless the EXTPEC control is active. In that case the address range 0FCE0h - 0FCFEh is used for PEC pointers, leaving address range 0FDE0h - 0FDFEh free for bit-addressable RAM.
IRAMADDRESSABLE	Sections start at an even address (word alignment) in the internal RAM of the processor. By default the internal RAM ranges from 0FA00h to 0FFFFh for the C166/ST10, but this range can be changed for derivatives like the C16x/ST10 by locator controls IRAMSIZE or MEMORY IRAM.

Table 7-4: Align types

See section 8.4, *Differences between C16x/ST10 and XC16x/Super10*, for PEC pointer differences.

combine-type This field specifies how the section are combined with sections from other modules to form a segment or page in memory. The actual combination occurs during the linking and locating.

Combine Type	Description
Not specified	The default is non-combinable. The section is not combined with any other section. Note, however, that separate parts of this section in the same module are combined.
PRIVATE	Is the same as not specified.
PUBLIC	All sections of the same name will be combined at link stage. The length of the resulting section is equal to the sum of the lengths of the sections combined.

Combine Type	Description
GLOBAL	All sections of the same name that are defined to be global are combined in contiguous memory. The length of the resulting section is the sum of the lengths of the sections combined. GLOBAL goes one step further than PUBLIC in that it also combines sections (with the same name) in different TASKS.
COMMON	All sections of the same name that are defined to be common are overlapped to form one section. All of the combined sections begin at the same physical address. The implementation of the combination of sections with a COMMON combine type requires the next attributes of the sections which are combined to be equal: – section size – align type – memory type – class – group
SYSSTACK	All sections of the same name that are defined to be system stack are combined to one section so that each combined section ends at the same address (overlaid against high memory) and grows 'downward'. The length of the stack section after combination is equal to the sum of the lengths of the sections combined. The locator places the system stack section in the internal RAM where it can be accessed with the Stack Pointer Register.
USRSTACK	All sections of the same name that are defined to be user stack are combined to one section so that each combined section ends at the same address (overlaid against high memory) and grows 'downward'. The length of the stack section after combination is equal to the sum of the lengths of the sections combined. The user stack section can be located at any memory address, and is accessed as data with DPPx and offset. USRSTACK sections are only combined at link stage.

Combine Type	Description
GLBUSRSTACK	This is the same as the USRSTACK *combine-type*, except that it also combines sections in different tasks.
AT *expression*	This is an absolute section to be located at the memory defined by the *expression*. The *expression* must evaluate to a constant in the range: 00000h – 0FFFFh for NONSEGMENTED MODEL(NONE) or MODEL(TINY) 00000h – 0FFFFFFh for SEGMENTED No forward references are allowed. **AT** is considered as an additional *align-type* and implies the default *combine-type* PRIVATE.

Table 7-5: Combine types

'*class*' A *class* name can be used to tell the locator that sections are to be located near each other in memory. This is no combining of sections. *Class* indicates that uncombined sections are to be placed in the same general area in physical memory (for example, ROM). You can use any name, but the name must be a unique **a166** identifier.

Example:

Two sections located adjacent to one another:

```
DATA1   SECTION  PDAT 'ROM'
        .
        .
        .
DATA1   ENDS


DATA2   SECTION  PDAT 'ROM'
        .
        .
        .
DATA2   ENDS
```

The paragraph *Sections* in chapter 4, *Assembly Language*.

SET

Synopsis:

set-name **SET** *expression*

Description:

The SET directive defines a symbol (constant name) for an *expression*.

Public/external declaration of symbols defined with SET is not allowed. Unlike the EQU directive, SET symbols may be redefined. Relocatable SET symbols (i.e. the expression of the symbol contains one or more relocatables) cannot be redefined. The most recent SET directive determines the value of the symbol.

Constants defined with SET cannot be accessed in the debugger because these names may be redefined and therefore a clear assignment of the name to a value is not possible.

Field Values:

set-name This a unique **a166** identifier.

expression This is any expression with the restrictions named above.

Examples:

```
CSET1  SET  2 + 3       ; CSET1 = 5
CSET2  SET  CSET1 + 4   ; CSET2 = 9
CSET3  SET  CSET4 + 1   ; ERROR, forward reference
                        ; to CSET4.

DSEC1  SECTION DATA
ATAB   DS 10
ABYTE  DB 0
DSEC1  ENDS

CSET4  SET CSET2 + (ABYTE - ATAB)  ; CSET4 = 19
CSET5  SET ABYTE + 3     ; relocatable allowed!
CSET6  SET CSET5 * 3     ; ERROR: only + and - are
                         ; allowed in a relocatable
                         ; expression !!
```

SSKDEF

Synopsis:

SSKDEF *stack-size-number*

Description:

The SSKDEF directive specifies the size of the system stack. Only one SSKDEF directive is allowed per module. This directive sets the STKSZ field in the SYSCON register to the same value as the *stack-size-number*. The compiler generates SSKDEF 0 by default, which is the maximum system stack size of 256 words for the C166/ST10. Note that the locator reserves a system stack range when it encounters an SSKDEF directive, with an exception for SSKDEF 7. With SSKDEF 7 the locator expects the use of SYSSTACK sections.

Field Values:

stack-size-number

Can be an absolute number in the range 0 to 4, or 7. The number corresponds to the system stack size:

Number	System Stack Size	Physical Stack Space
0	256 words	0FA00h – 0FBFFh (default)
1	128 words	0FB00h – 0FBFFh
2	64 words	0FB80h – 0FBFFh
3	32 words	0FBC0h – 0FBFFh
4	512 words	0F800h – 0FBFFh
7	entire internal RAM	0F600h – 0FDFFh

Table 7-6: System stack size

Example:

```
SSKDEF 2 ; system stack is 64 words
```

TYPEDEC

Synopsis:

TYPEDEC *name*:*type* [, *name*:*type*]...

Description:

You can use this directive to define the type attribute of a symbol name. You can use this directive to determine the type of forward referenced symbol names already at the top of a module.

The TYPEDEC directive does not define a symbol; only a type is assigned to a symbol name. Defining this name with a different type results in an error. If you assign a type to a name via TYPEDEC, but you do not define and use this name, the name is accepted by the assembler.

Field Values:

name A user-defined variable, label, procedure, register bank, interrupt number or constant.

type The *type* of the symbol. This field can have the following values:

BIT	- specifies a variable (1 bit)
BYTE	- specifies a variable (8 bits)
WORD	- specifies a variable (16 bits)
BITWORD	- specifies a variable (16 bits)
SHORT	- specifies a near label
NEAR	- specifies a near label
FAR	- specifies a far label
DATA3	- specifies a constant (3 bits)
DATA4	- specifies a constant (4 bits)
DATA8	- specifies a constant (8 bits)
DATA16	- specifies a constant (16 bits)
INTNO	- specifies a symbolic interrupt number
REGBANK	- specifies a register bank name

Example:

```
TYPEDEC  s_lab:SHORT
TYPEDEC  con_t_3:DATA3

CSEC     SECTION CODE
APROC    PROC

         JMP  s_lab       ; generates JMPR
         JMP  n_lab       ; generates JMPR
         NOP
n_lab:   MOV R0, con_t_3  ; Generates MOV Rn,#data4
                          ; (E000)
s_lab:   MOV R0, con_3    ; Generates MOV reg,#data16
                          ; (E6F00000)
         RET
APRO     ENDP
CSEC     ENDS

con_t_3  EQU  0
con_3    EQU  0
```

CHAPTER 8

DERIVATIVE SUPPORT

TASKING

8 CHAPTER

8.1 INTRODUCTION

The TASKING C166/ST10 tool chain supports a variety of derivatives of the C166/ST10 family. These derivatives are based on different processor architectures. The tool chain supports the following architectures:

- The standard C166 extended architecture as used by the Infineon C16x and STMicroelectronics ST10.
- The standard C166 extended architecture with MAC co-processor support such as the ST10x272
- The C166S v1.0 architecture.
- The XC16x / Super10 architecture, including MAC co-processor.
- Enhanced Super10, such as the Super10M345, including MAC co-processor.
- The tools

8.2 DIFFERENCES BETWEEN ST10 AND ST10 WITH MAC CO-PROCESSOR

STMicroelectronics supplies derivatives of the ST10 (not Super10) with a MAC co-processor, for example the ST10x272. The difference between the ST10 and the ST10 with MAC co-processor is made by the additional instructions (Co*) for this co-processor.

8.3 DIFFERENCES BETWEEN C16x/ST10 AND C166S V1.0

The C166S V1 is an Infineon IP core to be used for example in ASIC designs. There are only very small differences in instruction behavior between the C16x and the C166S V1. There are no additional features in the C166S V1.

8.4 DIFFERENCES BETWEEN C16x/ST10 AND XC16X/SUPER10

This describes the most important differences between the XC16x/Super10 (ext2 architecture) and C16x architecture for which, toolchain extensions are available.

Instruction set	Extra instruction parameters have been added for predicting the possibility of jumps. Additionally, the pipeline is fully interlocked, which requires instruction scheduling / reordering from the toolchain to prevent pipeline stalls.
register banks	Two additional register banks are available which are not mapped into internal memory where the normal register banks are located. These additional register banks are called local register banks and can be used in interrupt service routines to increase performance.
PEC pointers	All PEC related registers are located in the I/O RAM area (0xE000-0xF000). Additionally PEC source pointers (SCRP*x*) and destination pointers (DSTP*x*) can be initialized to point to any segment instead of the segment 0 limitation of the C16x/ST10. A PECSEG*x* register is available for each PEC channel. The upper eight bits of this register are used as the segement number for SCRP*x*. The lower eight bits are used as the segment number for DSTP*x*.
vector table	The vector table can be located anywhere in memory starting on a segment boundary. Additionally the vector table can be scaled up to a maximum of 32 bytes per vector allowing interrupt service routines to be located inside vector table entries.

The MAC co-processor adds a range of new instructions (Co*) to control the MAC co-processor. Additional SFRs are defined for interfacing with the MAC co-processor.

8.5 DIFFERENCES BETWEEN SUPER10 AND ENHANCED SUPER10

The enhanced Super10, such as the Super10M345, has all the features of the Super10 and more. The enhanced Super10 has a third local register bank. The MAC co-processor adds new instructions (Co*) to control the MAC co-processor, such as the CoSHL instruction with rounding.

8.6 ENABLING THE EXTENSIONS

The extensions are enabled in the assembler by selecting an architecture. The linker/locator also supports a few controls for selecting the extensions.

8.6.1 EXTEND CONTROLS (ASSEMBLER)

With the following EXTEND controls you can select the archecture in the assembler:

EXTEND (default)	Selects the standard C166 extended architecture as used by the Infineon C16x and STMicroelectronics ST10.
EXTMAC	Selects the standard C166 extended architecture with MAC co-processor support such as the ST10x272
EXTEND1	Enables support for the C166S v1.0 architecture.
EXTEND2	Enables support for the XC16x/Super10 architecture, including support for the MAC co-processor.
EXTEND22	Enables support for enhanced Super10, such as the Super10M345. This includes support for the MAC co-processor.

Additionally the assembler supports the EXTPEC16 / NOEXTPEC16 control. The EXTPEC16 control enables the use of PECC8 to PECC15 in a PECDEF directive. The location of the relevant SRCPx and DSTPx registers to be reserved is determined by EXTPEC or EXTEND2 during the locator phase.

See also the explanation of above mentioned controls in Section 6.3, *Description of a166 Controls* in Chapter *Assembler Controls*.

8.6.2 STDNAMES CONTROL (ASSEMBLER)

The assembler has an internal definition of the core Special Function Registers (see Section 5.4, *SFR and Bit names* in Chapter *Operands and Expressions*).

Because each derivative can have its own set of SFRs, SFR files are used to define the full set of registers. Note that the internal core register set is affected by the EXTMAC, EXTEND2 and EXTEND22 controls.

To define a set of registers for a derivative, use the STDNAMES control. This control has the name of an SFR file, containing the register definitions, as argument. In an SFR file only the DEF and LIT directive can be used to define register names. SFR files for specific derivatives are included in the package in the `/etc` directory of the installed product. The files are named `reg`*`derivative`*`.def`.

8.6.3 IRAMSIZE CONTROL (LOCATOR)

Derivatives of the C166/ST10 family come with different sizes of internal RAM. Because this size is only of importance for the locator, you cannot specify it with the assembler or linker. The locator control IRAMSIZE is used to specify the internal RAM size in bytes. By default this size is 1024 bytes (1 Kb). For most derivatives you have to increase this to 2048 bytes. For example:

```
l166 locate test.lno IRAMSIZE(2048)
```

The locator uses this size for locating register banks, system stack and system stack sections.

8.6.4 EXTEND CONTROLS (LOCATOR)

To enable locator extensions required for some architectures, the locator supports the socalled EXTEND controls.

With the EXTEND2 control the locator supports the CX16x/Super10 architectures (also those that require EXTEND22 for the assembler).

The EXTEND2 control will not locate code in page 2 and 3 of segment 0, the system stack may be located anywhere in memory, PEC pointers are moved, segment 191 is reserved and vector table scaling is enabled.

The EXTEND2_SEGMENT191 does the same, except that it does not reserve segment 191.

CHAPTER 9

LINKER/LOCATOR

TASKING

CHAPTER 6

9.1 OVERVIEW

The next sections describe how the C166/ST10 linker/locator program **l166** works. We first introduce the linker/locator to you by describing its functions globally and we give you some basic examples. Later on a more elaborate description of all the features follows.

9.2 INTRODUCTION

l166 is a program that reads one or more object modules created by the assembler **a166** and locates them in memory. Object modules can be in ordinary files or in object libraries. An object library is a file containing object modules. Each of these modules have been created by the assembler as a separate module in an individual object file. Afterwards you can put these files in the library with the library manager (**ar166**).

l166 combines a linker and locator into one program. The linker and locator use a lot of identical functions, so combination of the linker and locator is justified. However, you can not use the link and locate stage simultaneously. **l166** has the controls LINK and LOCATE to indicate what stage to execute. Combining both stages and producing a loadable file with one linker call is not possible (and not useful). **l166** also accepts invocation files of both the Infineon linker and Infineon locator.

The link stage

The link stage attempts to resolve external references within the same task. Any unresolved external reference remains in the output file. In order to resolve unresolved external symbols the linker searches the libraries and extracts referenced modules.

The locate stage

The locate stage resolves global/extern references and combines relocatable object modules, each containing one linked task, to one absolute object file. All sections are located to absolute memory addresses and all processor resources are allocated. In order to resolve unresolved external symbols the locator searches the libraries and extracts referenced modules. You can convert the resulting code and load it into a debugger or emulator or burn it into an EPROM with a programmer.

9.2.1 LINKER/LOCATOR PURPOSE

Many programs are often too long or too complex to be in one single unit. As programs in a single unit grow too large they become more difficult to maintain. An application broken down in small functional units is easier to code and debug. Translation of these programs into load modules is faster than their counterpart in one module.

The linker links relocatable object modules belonging to the same task to one relocatable 'task object module'. The locator translates relocatable 'task object modules' into absolute load files. This lets you write programs that are (partially) made up of modules that can be placed anywhere in memory. Doing so, reusability of your code increases. You can place those modules that fulfill a specific task needed in many applications (I/O-routines) in a library, thus making them available for many programmers.

9.2.2 LINKER/LOCATOR FUNCTIONS

1166 performs the following functions:

Link functions:

- Resolve public/external references.
- Combine a list of object modules in single files or in libraries into one larger task module.
- Combine partial sections defined with the same name in different modules into a single section.
- Generate an relocatable output and map file.

Locate functions:

- Resolve global/external references.
- Combine a list of (relocatable) modules in single files or in libraries into one larger load module.
- Transform relocatable addresses into absolute addresses.
- Allocate address space for sections and associate an absolute address with each section.
- Generate an absolute output file and map.

9.3 NAMING CONVENTIONS

Section

A section is a unit of code or data in memory. Every section is described by a memory type, a combine type and an align type. A section can be absolute: in the assembler source text an absolute address is bound to the section. A relocatable section is a section that is defined in the assembler text without an address. For these sections the locate stage of **l166** determines the final location in memory. You can split a section into parts each of which can reside in different modules in the application. These parts are called partial sections.

Module

A module is a unit of code that can be located in a file. A module can contain one or more sections. The terms object module and object file are used as equivalent terms.

Module Name

The module name is the name that is assigned to an object file. This can be any user-defined name (See the NAME control). When you do not define a module name, the filename of the object file is taken as default.

Library

An object library is a file containing a number of object modules. The linker/locator includes only those parts from a library that have been referred to from other modules.

Program

A program can be created out of one single task or out of a number of tasks.

Task

An independent program part which fulfills a closely defined function and operates within its own environment. A task is composed of a source main module and possibly several source modules which you can individually compile to relocatable object modules. Tasks are used to respond to events by interrupt.

9.4 LOCATE ALGORITHM

The various memory elements which have different memory limitations are located according to a locate algorithm. The locate algorithm is discussed below. The memory elements are stated in the order in which they are located.

SFR area and Extended SFR area

Are always reserved.

Reserved areas

Only those areas specified by the RESERVE control.

Segment 191

Only reserved when the XC16xSuper10 is selected with the EXTEND2 linker/locator control.

System stack.

Only if no SYSSTACK sections are used and the SSKDEF assembler directive was used in one of the modules. The size depends on the SSKDEF number. The largest size is used.

PEC pointers

Which PEC pointer areas depend on the PECDEF assembler directives in the modules.

Interrupt vector table

Only if the VECTAB control is on. If the VECINIT control is on, all vectors are reserved. If NOVECINIT is on, only the used interrupt vectors are reserved.

Absolute GPRs

Register banks made absolute by the ADDRESSES control.

Absolute sections

Sections having the AT.. combine type or sections made absolute by the ADDRESSES control.

Absolute groups and groups with an absolute section

The relative sections in the group are located in the relative order.

Bit-addressable elements

First bit sections (sections with the section type BIT or the align type BITADDRESSABLE) with a class *and* a CLASSES control are located in the 'The relative order', as low as possible in the bitaddressable area.
Then all bit sections without a class or with a class without a CLASSES control are located in 'The relative order'.

System stack elements

Fist system stack sections (sections with the SYSSTACK combine type) with a class *and* a CLASSES control are located in 'The relative order'.
Then all system stack sections without a class or with a class without a CLASSES control are located in 'The relative order'. The system stack is located as high as possible in the internal RAM area (from 0FC00h downwards). When no more system stack sections are left and the SSKDEF assembler directive was also used, all remaining gaps within the area stated by the SSKDEF directive are filled up. For the XC16x/Super10 architectures, you can use the ADDRESSES control to relocate the system stack anywhere in memory.

Relative sections, groups and classes

First all sections and groups with a class *and* a CLASSES control are located in 'The relative order'.
Then all sections and groups not having a class or having a class without a CLASSES control are located in 'The relative order'.

THE RELATIVE ORDER

GPRs

Register banks are located in internal RAM as low as possible.

IRAMADDRESSABLE sections

All IRAMADDRESSABLE sections are located in the internal RAM as low as possible.

Linear sections

Sections with the section type LDAT are located as low as possible within 48k, starting at the address specified by the ADDRESSES LINEAR control. If the SETNOSGDPP control is used, the locator tries to locate LDAT sections in the 4 indicated pages. Page 3 is always the last page the locator searches for a gap. If it is not possible to locate an LDAT section within the 48k, the locator tries to locate it in page 3 of segment 0.

NONSEGMENTED sections

These are sections assembled in NONSEGMENTED mode.
Located as low as possible in segment 0 (first 64k).

SEGMENTED sections

These are sections assembled in SEGMENTED mode.
Located as low as possible in the processor memory space.

THE ORDER CONTROL

If a section which is included in an order control, is located, the complete order is processed before continuing with the normal locating procedure.

The locator ensures that no sections or groups cross data or code frame borders.

All sections are aligned to an address according to their align type.

The locator orders sections with the same priority on the section align type. This can avoid memory gaps introduced by the alignment of sections. With sorting on alignment the locator uses the following order for sections of the same priority:

BIT (first)

BYTE

BITWORD

IRAMADDRESSABLE

PECADDRESSABLE

WORD

DWORD

PAGE

SEGMENTED (last)

9.4.1 PUBLIC AND GLOBAL GROUPS

A global group is a group containing a section with a 'global' combine type. A 'global' combine type is one of:

GLOBAL
SYSSTACK
GLBUSRSTACK
COMMON

All other groups are 'public'. If groups with equal names of tasks located together are global, the locator combines them to one group.
To indicate the type of the group, an extra field labeled with **T** is added before the group name in the map file . This field is **P** for a public group and **G** for a global group.

9.4.2 COMBINATION OF COMMON SECTIONS

The implementation of the combination of sections with a COMMON combine type requires the next attributes of the sections which are combined to be equal:

- section size
- align type
- memory type
- class
- group

Both the linker and locator write the COMMON section of the first input module containing that section to the output file. The symbols are relocated for all modules containing the section, as if the sections were overlaid.

9.5 INVOCATION

Because the linker and locator are implemented in one program, two controls are added to indicate which stage must be activated:

LINK	Link object files
LOCATE	Locate object files

When you use these controls, you must specify them as the first control. Different invocations of the **l166** are possible. The invocation line that covers all possible invocations on a PC is:

l166 [**LINK**|**LOCATE**] [*input-file*]... [@*invocation-file*]... [*control-list*]
l166 –V
l166 –?

When you use a **UNIX** shell (**C–shell**, **Bourne shell**), controls containing special characters (like '( )') must be enclosed with **" "**. The invocations are the same as for a PC, except for the **–?** option in the **C–shell**:

l166 "–?" or **l166 –\?**

The examples in this chapter are given for a PC environment.

The invocation file contains a control list. A combination of invocation file and control list on the invocation line is possible. It is also possible to supply more than one invocation file. The invocation file is indicated by a preceding '@' (not part of the filename). The names of the *input-files* are also allowed in the invocation file. You may nest the invocation files up to eight levels. Invocation with **–V** only displays a version header, while invocation with **–?** displays a tiny manual. The invocation line above can be divided in linker and locator invocations.

When you use EDE, you can control the linker/locator settingss from the **Application** and **Linker/Locator** entries in the **Project | Project Options** dialog.

Linker invocations

1. **l166** [**LINK**] [*object-file*]... [*lib-file*[(*module-name*,...)]]... [*control-list*] [**TO** *output-file*]

2. **l166** @*invocation-file*...

3. a combination of the two lines above.

Locator invocations

1. **l166** [**LOCATE**] [*task*]... [*lib-file*[(*module-name*,...)]... [*control-list*] [**TO** *output-file*]

2. **l166** @*invocation-file*...

3. a combination of the two lines above.

Field Values:

input-files
One or more object files, library files (link stage) or task definitions (locate stage).

object-files
One or more object files separated by a ',' or a space. These object-files designate object modules which serve as input for **l166**. The default extension for link stage is `.obj`. The default extension for locate stage is `.lno`.

lib-files
One or more object library files. You can specify a library with parentheses: all module-names specified in parentheses are included. If you give no extension, the default `.lib` is used. You can also specify a library without parentheses. In this case you must specify the library name with its full name (with extension `.lib`). Now **l166** includes all needed modules of the library. For more information see the note at the end of this section and section 9.9, *Overview Input and Output Files*.

module-name
This is the name that is assigned to an object file. This can be any user-defined name (See the NAME control). When you do not define a module name, the filename of the object file is taken as default.

invocation-file
This is a file that contains commands for **l166**. The contents of this file is not read as an object module, but **l166** processes it as if it had been typed on the command line. The filename must be preceded by a '@'. An *invocation-file* may contain spaces, tabs and newlines to separate command elements. An advantage of using *invocation-files* is that you can place comments in them. Everything following a ';' up to the end of a line is ignored. Multiple *invocation-files* may be present on one line. *Invocation-files* may also be nested, up to eight levels.

Since the characters '@' and '$' are valid to be used in a filename, these characters will not be interpreted when used as an invocation file. For example, `@@invoc.ilo` tells **l166** to read the file '`@invoc.ilo`' and `@${invoc}.ilo` tells **l166** to read the file '`${invoc}.ilo`'.

Output-file
This is the output from **l166**. For the link stage the output is a linked object file with the basename of the first object file in the input list (with default extension `.lno`) as default filename. For the locate stage the output is an absolute object file (with default filename `a.out`).

control-list
This is a subset of the general controls specified in the next sections.

task
is defined as:

[TASK [(*task-name*)]] [INTNO {[*int.-name*][=*int.no*]}]
object-file [*task-control-list*]

task represents all information that is required by the locate stage to combine and locate each task. The *object-file* designates an object module that contains the code representing one single task.

task-name
Is an identifier that designates a task. If a *task-name* is already specified in the assembler source, **l166** overwrites this *task-name*. So the *task-name* specified at locate stage governs.

task-control-list
Is a subset of the task controls specified in the next sections.

int.-name
This is a symbolic name that designates an interrupt number. Interrupt names are usually defined in the assembler source code with the PROC directive. A specification of an interrupt name in the *invocation-line* is only required for completeness.

int.-no
This represents the interrupt number of the specified interrupt procedure. The value is an absolute number in the range 0 - 127.

Invocation Examples

Link Invocation-file: `lnk.ilo`

```
LINK
x.obj y.obj z.obj       ; link three object files
TO xyz.lno            ; to output file
```

Locate Invocation-file: `loc.ilo`

```
LOCATE
TASK (xyz) INTNO = 0    ; locate a linked
xyz.lno                 ; object file
TO xyz.out            ; to an absolute
                        ; output file
```

Invocation of **l166** with invocation file:

```
l166 @lnk.ilo           ; link stage
l166 @loc.ilo           ; locate stage
```

Invocation of **l166** with command lines:

```
l166 LINK   x.obj y.obj z.obj TO xyz.lno
l166 LOCATE TASK (xyz) INTNO = 0 xyz.lno
            TO xyz.out
```

The example above can also be written as:

```
l166 x.obj, y.obj, z.obj TO xyz.lno
l166 TASK (xyz) INTNO = 0 xyz.lno TO xyz.out
```

The example invocation of **l166** can be further simplified:

```
l166 x y z TO xyz       ; default input extension is
                        ; .obj default output
                        ; extension is .lno

l166 TASK (xyz) INTNO = 0 xyz TO xyz
     ; default input extension is .lno
     ; default output extension is .out
     ; If TO xyz is omitted, the output file is a.out
```

Example use with libraries:

```
l166 LINK x.obj y.obj util.lib util2.lib  TO xy.lno
```

If no LINK or LOCATE control is encountered the **l166** starts the link stage and prints '(LINKING)'. However if **l166** encounters a TASK control the locate stage is started and '(LOCATING)' is printed.

You can not use locate controls during the link stage and vice versa. In this case **l166** reports an error.

9.6 ORDER OF OBJECT FILES AND LIBRARIES

You can place main modules and library names in any order in the list of *object-files lib-files*. **l166** first reads all objects and resolves external references and then searches the libraries in order to resolve unresolved symbols. This is done until all references have been resolved or no more references can be resolved.

Though you can specify the files in any order, the order influences the results. This is illustrated by the following examples.

Suppose we have the folloing libraries:

`lib1a.lib`	Defines version 1 of symbol A
`lib1b.lib`	Defines version 2 of symbol A
`lib2.lib`	Defines symbol B which requires symbol A
`lib3.lib`	Defines symbol B and defines version 3 of symbol A

And these two object files:

`a.obj`	Requires symbol A
`b.obj`	Requires symbol B

The first occurence of an explicitly referenced symbol is extracted. The next invocations therefor behave like expected:

```
l166 lnk a.obj lib1a.lib          version 1 of A is extracted
l166 lnk a.obj lib1b.lib          version 2 of A is extracted
l166 lnk a.obj lib3.lib           version 3 of A is extracted
l166 lnk a.obj lib1a.lib lib1b.lib
                                  version 1 of A is extracted
l166 lnk a.obj lib2.lib lib1a.lib lib1b.lib
                                  version 1 of A is extracted
```

When a symbol is both required and defined in the library (`lib3.lib`), the symbol definition from that library will always be used, irrespective of the position on the command line. The next invocations all result in extraction of version 3 of symbol A. Libraries with other versions of symbol A which occur first on the command line, are skipped because symbol A is not required at that point yet:

```
l166 lnk b.obj lib1a.lib lib3.lib lib1b.lib
l166 lnk b.obj lib1a.lib lib1b.lib lib3.lib
l166 lnk b.obj lib3.lib lib1a.lib lib1b.lib
l166 lnk lib3.lib b.obj lib1a.lib lib1b.lib
```

The next invocation however will link version 1 of symbol A because it is requested by `a.obj`:

```
l166 lnk b.obj a.obj lib1a.lib lib3.lib lib1b.lib
```

In the next invocation b.obj requires symbol B which is found in `lib2.obj`. But at this point also symbol A is required. This may cause an unresolved symbol error in other linkers. However, **L166** rescans the libraries again and finally resolves symbol A (version 1) when `lib1a.obj` is rescanned:

```
l166 lnk b.obj lib1a.obj lib1b.obj lib2.obj   (symbol B)
```

Rescan:

```
b.obj lib1a.obj lib1b.obj lib2.obj   (symbol A)
```

9.7 ENVIRONMENT VARIABLES

l166 uses three environment variables:

TMPDIR	The directory used for temporary files. If this environment variable is not set, the current directory is used.
LINK166	If set, this environment variable is read after all other invocation is parsed and the link stage is initialized.
LOCATE166	If set, this environment variable is read after all other invocation is parsed and the locate stage is initialized.

Examples:

PC:

By setting the following environment variables:

```
set TMPDIR=\tmp
set LINK166=LIBPATH(\usr\lib) c166t.lib fp166t.lib
              rt166t.lib
set LOCATE166=CASE
```

the invocations:

```
l166 main.obj TO task1.lno
l166 task1.lno
```

are now equal to:

```
l166 main.obj TO task1.lno LIBPATH(\usr\lib)
          c166t.lib fp166t.lib rt166t.lib
l166 task1.lno CASE
```

and the directory for temporary files is: `\tmp`.

UNIX:

if using the Bourne shell (sh)

```
TMPDIR=/tmp
LINK166="LIBPATH(/usr/lib) c166t.lib fp166t.lib
        rt166t.lib"
LOCATE166=CASE
export TMPDIR LINK166 LOCATE166
```

if using the C-shell (csh)

```
setenv TMPDIR  /tmp
setenv LINK166 "LIBPATH(/usr/lib) c166t.lib fp166t.lib
        rt166t.lib"
setenv LOCATE166 CASE
```

9.7.1 USER DEFINED ENVIRONMENT VARIABLES

When an environment variable is needed in an invocation file, the following construction can be used:

$[{]*environment-name*[}]

If the *environment-name* is not set, a warning will be issued and an empty string is substituted.

Examples:

PC:

By setting the following environment variables:

```
set OBJDIR=\usr\obj\
set LNODIR=\usr\lno\
set PRINTFILE=\tmp\print.lnl
```

the linker invocation file:

```
LINK ${OBJDIR}file1.obj
     ${OBJDIR}file2.obj
TO   ${LNODIR}file.lno
PRINT( $PRINTFILE )
```

is now equal to:

```
LINK \usr\obj\file1.obj
     \usr\obj\file2.obj
TO   \usr\lno\file.lno
PRINT( \tmp\print.lnl )
```

UNIX:

if using the Bourne shell (sh)

```
OBJDIR=/usr/obj/
LNODIR=/usr/lno/
PRINTFILE=/tmp/print.lnl
export OBJDIR LNODIR PRINTFILE
```

if using the C-shell (csh)

```
setenv OBJDIR       /usr/obj/
setenv LNODIR       /usr/lno/
setenv PRINTFILE    /tmp/print.lnl
```

9.8 DEFAULT OBJECT AND LIBRARY DIRECTORIES

When an object or library file is supplied to **l166**, it searches the file in the following directories:

- when the LIBPATH control is set **l166** appends the library filename to the directory specified with that control and tries to open the file.
- when the control is set **l166** appends the object filename to the directory specified with that control and tries to open the file.
- when the file could not be opened with the previous rules **l166** tries to open it as issued in the invocation.
- at last **l166** tries to open the file in the `lib` directory relative to the directory where **l166** is started from. For example if **l166** is installed in the directory `\c166\bin` (UNIX: `/usr/local/c166/bin`) the object and library files are searched in the directory `\c166\lib` (UNIX: `/usr/local/c166/lib`).

The LIBPATH and MODPATH controls can also be set in the LINK166 or LOCATE166 environment variables. You can specify more than one directory by separating them with commas or spaces.

See the examples in section 9.7 *Environment Variables*.

Examples:

PC:

```
l166 LOC main.obj funcs.lib 166\c166s.lib
     LIBPATH( \lib166 )
```

l166 uses the files `main.obj` in the current directory, the `\lib166\funcs.lib` and `\c166\lib\166\c166s.lib` (**l166** is installed in the directory `\c166\bin`).

UNIX:

```
l166 LOC main.obj funcs.lib 166/c166s.lib
     LIBPATH( /usr/local/lib166 )
```

l166 uses the files `main.obj` in the current directory, the `/usr/local/lib166/funcs.lib` and `/usr/local/c166/lib/166/c166s.lib` (**l166** is installed in the directory `/usr/local/c166/bin`).

9.9 OVERVIEW INPUT AND OUTPUT FILES

The input files and output files for the link stage are:

Object files

Input files for the link stage which are the output of the assembler, the extension must be `.obj`.

Object libraries

You can put object files in library files with **ar166**. The extension of the library file must be `.lib`. The library files are searched if any unresolved references are left after reading the object files.

Invocation files

These files can be used to control the linking. The invocation files are not restricted to any name but must be preceded by a '@'.

Linked object file

The output file containing the linked task. There are no restrictions to the extension of the filename. If no extension is given, the default extension is `.lno`.

Print file

This output file contains textual information about the linking: addresses and types of sections and symbols. The name is the output file with extension `.lnl` unless you specify another name.

The input files and output files for the locate stage are:

Object files

Input files for the locate stage which are the output of the assembler, the extension must be `.obj`.

Object libraries

You can put object files in library files with **ar166**. The extension of the library file must be `.lib`. The library files are searched if any unresolved references are left after reading the object files.

Linked object files

Files that are output from the link stage, each containing one task. The default extension is `.lno`.

Invocation files

These files can be used to control the locating. The invocation files are not restricted to any name but must be preceded by a '@'.

Absolute object file

The output file of the locate stage contains absolute code. The default filename is `a.out`.

Print file

This output file contains textual information about the locating: addresses and types of sections and symbols. The name is the output file with extension `.map` unless you specify another name.

MISRA C Report file

This output file contains a report of the MISRA C checks used during compilation of C modules. It also contains linker/locator MISRA C information. The name is the output file with extension `.mcr` unless you specify another name.

PRINT FILE

The print file for both link stage and locate stage has a header which gives information about the invocation. This print file consists of the next items:

Header page — If the HEADER control is in effect, this page is the first page in the map file. It consists of a page header, action, information about invocation, and information about input file name(s) and output file name.

- Page header — Contains information about the linker/locator name, version, the date time and the page number followed by a title.
- Action — Indicates the stage of **l166**: Linking or Locating.
- Invocation — Contains information about the invocation of **l166**.
- Output — Reports the output file name and module name.
- Input — Reports the input files and module name.

Memory map	Contains information about all elements in memory, including sections. In the link stage this map contains information about the linked sections only.
Symbol table	Contains all symbols used.
Interrupt vector table	Contains the used interrupts.
Register bank	Link stage. Contains information about register bank layout.
Register map	Locate stage. Contains information about all register bank combinations
Summary	Contains a list of classes, groups and sections, alphabetically ordered by class and group. Additionally it contains some information about the linking or locating process, just as with the compiler **–t** option.
Error report	All found errors during linking or locating.

Before creating any output file **l166** checks if no input files can be overwritten.

9.10 PREDEFINED SYMBOLS

Predefined symbols are introduced to support the TASKING C166/ST10 C compiler. They are needed to supply begin and end labels for the startup code and for the floating point library routines.

Predefined names start with a '?' character. If the assembler encounters a predefined name it will always treat it as a symbol defined as follows:

```
EXTERN ?PREDEF:WORD
```

Where *?PREDEF* is one of the predefined names. Predefined symbols can be used for reference only. If the assembler reads a symbol starting with a '?' which is not known as predefined name an error will be issued. The symbols needed for the floating point and memory allocation library routines are resolved with a public symbol by the **l166** linker or with a global symbol by the **l166** locator and symbols needed for the startup code are resolved with a global symbol by the **l166** locator.

Class begin and end address information is available through predefined symbols. These are formed as follows:

```
?CLASS_name_BOTTOM
?CLASS_name_TOP
```

name The name of the class. If you refer to external defined classes, the assembler issues warning 168: "using external class name in predefined variable". If the locator cannot find this class, it will exit with an unresolved symbol error.

BOTTOM Contains the start address of the section of class *name* that was located at the lowest memory address.

TOP Contains the end address of the section of class *name* that was located at the highest memory address.

Predefined sections

The locate stage introduces a section ?INTVECT if the control VECTAB is in effect.

To control the heap needed for the C library, the sections ?C166_NHEAP (near heap) and/or ?C166_FHEAP (far heap) are introduced whenever one of the symbols ?C166_NHEAP_TOP or ?C166_NHEAP_BOTTOM (respectively ?C166_FHEAP_TOP or ?C166_FHEAP_BOTTOM) is referred. The size of the heap can be defined with the HEAPSIZE control.

The linker/locator will issue an error if the heap was needed, but the heap stack is empty.

The **?C166_NHEAP** section is defined as follows in non-segmented mode:

```
?C166_NHEAP SECTION LDAT WORD PUBLIC '?CHEAP'
?C166_NHEAP_TOP     LABEL WORD
      DS num  ;num is defined by HEAPSIZE
?C166_NHEAP_BOTTOM  LABEL WORD
?C166_NHEAP ENDS
PUBLIC  ?C166_NHEAP_TOP, ?C166_NHEAP_BOTTOM
```

In segmented mode the section type is changed to HDAT.

The same applies for the **?C166_FHEAP** section

Summary of all predefined names.

Predefined symbols known by the assembler needed by the startup code:

```
?USRSTACK_TOP       start of user stack sections
?USRSTACK_BOTTOM    end of user stack sections
?USRSTACK0_TOP      start of user stack sections for local register
                    bank 0 of the XC16x/Super10
?USRSTACK0_BOTTOM   end of user stack sections for local register
                    bank 0 of the XC16x/Super10
?USRSTACK1_TOP      start of user stack sections for local register
                    bank 1 of the XC16x/Super10
?USRSTACK1_BOTTOM   end of user stack sections for local register
                    bank 1 of the XC16x/Super10
?USRSTACK2_TOP      start of user stack sections for local register
                    bank 2 of the Super10M345 derivate
?USRSTACK2_BOTTOM   end of user stack sections for local register
                    bank 2 of the Super10M345 derivate
?SYSSTACK_TOP       start of system stack
?SYSSTACK_BOTTOM    end of system stack
?C166_INIT_HEAD     start of C166_INIT section
?C166_BSS_HEAD      start of C166_BSS section
?C166_NHEAP_TOP     start of ?C166_NHEAP section
?C166_NHEAP_BOTTOM end of ?C166_NHEAP section
?C166_FHEAP_TOP     start of ?C166_FHEAP section
?C166_FHEAP_BOTTOM end of ?C166_FHEAP section
?BASE_DPP0          base address of page to be addressed via DPP0
?BASE_DPP1          base address of page to be addressed via DPP1
?BASE_DPP2          base address of page to be addressed via DPP2
?BASE_DPP3          base address of page to be addressed via DPP3
```

The link and locate stage introduce the following sections:

?C166_NHEAP: section for the near heap needed for the C library
?C166_FHEAP: section for the far heap needed for the C library

The locate stage introduces the following section:

?INTVECT: interrupt vector table

9.11 L166 CONTROLS

You can influence the behavior of **l166** with controls. You can inform the **l166** how it has to do certain tasks. In case of multiple use of the same control, only the last entry is effective. An exception to this rule is the ASSIGN control. There are three types of controls:

- Controls both valid during link stage and locate stage (such as the Listing controls).
- Linking controls (only valid during link stage).
- Locating controls (only valid during locate stage).

Locating controls allow to control the strategy **l166** uses to determine the absolute addresses of the sections. You can use these controls to inform the locator about the order in which the sections must be located or at which absolute address a specific section must be placed. If you omit locating controls the locator uses the default locate algorithm mentioned in section 9.4.

The locating controls can be subdivided in two different type of controls:

- **General controls**. These controls apply to the whole locate job. The position in the invocation of these controls is not important.
- **Module scope controls**. The scope of these controls is restricted to the module after which they are specified on the command line. These controls affect only the module after which they are specified.

Example of module scope controls in an invocation file:

```
LOCATE
file1.lno NOGLOBALS
file2.lno
file3.lno
NOLOCALS
```

The NOGLOBALS control only affects `file1.lno` and the NOLOCALS control only affects `file3.lno`.

Module scope controls can have a general scope:

- when these controls are specified in the invocation before the first input module (just after the LOCATE control).
- when these controls are specified after the GENERAL control
- when the control affects a section with a global combine type or a global group

Once a module is named in the invocation it is possible to make controls affect this module by using the module scope switch.

***Remarks**:*

All controls used in the link stage are general controls.

In all link and locate controls the commas are optional.

9.11.1 THE MODULE SCOPE SWITCH

With the module scope switch you can tell the locator to switch the scope to a previous module in the invocation. A module scope switch can be permanent or temporary. The syntax of a scope switch is as follows:

{*filename*|GENERAL} permanent module scope switch

{*filename*|GENERAL *controls* } temporary module scope switch

All module scope controls following a permanent module scope switch affect the *filename* mentioned in the module scope switch or these controls get a GENERAL scope and affect all input modules. Using {GENERAL} is equal to using the GENERAL control.

The temporary module scope switch has the same effect as the permanent module scope switch, but it affects only the *controls* between the *filename* or GENERAL and the closing brace (}). Temporary module scopes can be nested up to eight levels deep.

The temporary module scope switch can also be used at defined places inside the controls. See the description of these controls for more information. The permanent scope switch cannot be used inside controls.

Example of an invocation file:

```
LOCATE
file1.lno
file2.lno
file3.lno
{GENERAL}
    NOLOCALS
{file1.lno
    NOGLOBALS
}
ADDRESSES SECTIONS(    SECT1 (200h)
                   {file2.lno SECT2 (300h) }
          )
```

The NOLOCALS control now affects all modules and the NOGLOBALS only affects `file1.lno`. The section `SECT1` in ADDRESSES SECTION is searched in al input files, while `SECT2` is only searched in `file2.lno`.

Note that module scope controls specified between the LOCATE control and the first module name are general, as if they were specified after GENERAL or {GENERAL}.

9.11.2 EXPRESSIONS

In all controls where addresses are specified the address may consist of an expression. An expression may only consist of numbers and operators. An expression must be one of the following:

number	Is an absolute number
PAGE *expr* PG *expr*	Calculate base address of page
PAG *expr*	Calculate page number of address
SEGMENT *expr* SG *expr*	Calculate base address of segment
FP *expr*	Calculate a floating point stack size. One stack element of the floating point stack is 14 bytes. Using **FP** *expr* is the same as *expr* * 14

expr + *expr*	Addition of expressions
expr - *expr*	Subtraction of expressions
expr * *expr*	Multiplication of expressions
expr / *expr*	Division of expressions
expr % *expr*	Remainder of division of expressions
expr & *expr*	Bitwise ANDing of expressions
expr | *expr*	Bitwise ORing of expressions
expr.number	The expression is a bit address in the form *bitoffset.bitposition*
(*expr*)	Control the evaluation order of expressions

When specifying addresses with the '-' operator, this can result in a conflict situation in address ranges as in: (*address* - *address*). For compatibility with the Infineon linker/locator it is still possible to use it, but it is hard to use in expressions. Placing ellipses around each expression is a possible solution. The other possibility is to use the word 'TO' instead of the '- ', which therefore, is the preferred notation.

Example:

```
RESERVE MEMORY ( PAGE 3 + 020H - PAGE 4 - 1 )
```

is interpreted as:

```
RESERVE MEMORY ( PAGE 3 + 020H - PAGE 4 TO 1 )
```

while it was meant to be

```
RESERVE MEMORY ( PAGE 3 + 020H TO PAGE 4 - 1 )
```

or

```
RESERVE MEMORY ( (PAGE 3 + 020H) - (PAGE 4 - 1) )
```

To allow an easy definition of a range of one or several pages or segments the RANGEP and RANGES range specifiers may be used in all controls which have an "*addr1* TO *addr2*" argument (e.g. CLASSES):

RANGEP(*number*,...)	Specify a range containing one or more pages. The range contains all pages starting at the page number of the lowest *number* and ending with the page number of the highest *number*.

RANGES(*number*,...)	Specify a range containing one or more segments. The range contains all segments starting at the segment number of the lowest *number* and ending with the segment number of the highest *number*.

Example:

```
CLASSES( 'CPROGRAM' ( RANGEP( 5,6,7 ) ) )
RESERVE( MEMORY( RANGEP( 1 ) ) )
```

is interpreted as:

```
CLASSES( 'CPROGRAM' ( 014000h TO 01FFFFh ) )
RESERVE( MEMORY( 04000h TO 07FFFh ) )
```

An overview of all **l166** controls in presented in section 9.11.4

9.11.3 OVERVIEW OF CONTROLS PER CATEGORY

The following list is an overview of the controls per category. Note that not all controls are available in both link and locate stage.

Print file controls

PRINT()/NOPRINT	Print file generation

Listing controls

The listing controls allow to specify what the contents of the print file should look like:

HEADER/NOHEADER	Turn on/off header page in print file
LISTREGISTERS/NOLISTREGISTERS	Turn on/off register bank listing in print file
LISTSYMBOLS/NOLISTSYMBOLS	Turn on/off symbol listing in print file
MAP/NOMAP	Turn on/off section map listing in print file
SUMMARY/NOSUMMARY	Turn on/off summary printing in print file

Controls controlling the symbol table

COMMENTS/NOCOMMENTS	Turn on/off the listing of comment records
GLOBALS/NOGLOBALS	Turn on/off the listing of global symbols
LINES/NOLINES	Turn on/off the listing of high level line symbols
LOCALS/NOLOCALS	Turn on/off the listing of local symbols
PRINTCONTROLS()	Select controls to affect print file only
PUBLICS/NOPUBLICS	Turn on/off the listing of public symbols
PURGE/NOPURGE	Turn off/on the listing of all symbol types
SYMB/NOSYMB	Turn on/off the listing of high level symbolic information
SYMBOLCOLUMNS()	Set the number of columns of the symbol table

Controls controlling the print file format

DATE()	Set date in print file header
PAGELENGTH()	Set the print file page length
PAGEWIDTH()	Set the print file page width
PAGING/NOPAGING	Turn on/off paging of print file
TITLE()	Set title in print file header

Object file symbol controls

ASSIGN()	Assign a value to a symbol
COMMENTS/NOCOMMENTS	Include/exclude comment records in output file
DEBUG/NODEBUG	Include/exclude debug information in output file
GLOBALS/NOGLOBALS	Include/exclude global symbol records in output file
LINES/NOLINES	Include/exclude high level line information in output file
LOCALS/NOLOCALS	Include/exclude local symbol records in output file
OBJECTCONTROLS()	Select controls to affect output file only
PUBLICS/NOPUBLICS	Include/exclude public symbol records in output file
PURGE/NOPURGE	Exclude/include all symbol records in output file
RENAMESYMBOLS()	Rename symbols read from object file
SYMB/NOSYMB	Include/exclude high level symbolic information

Section location controls

ADDRESSES()	Locate sections, groups or registers at an absolute address
CLASSES()	Set the valid address range for one or more classes
CODEINROM	Puts zero byte sections always in ROM instead of RAM.
HEAPSIZE()	Set the size of the heap section (used for C library support)
MEMORY()	Specify which areas of the memory are ROM and which areas are RAM
OVERLAY()	Overlay classes for code memory banking
ORDER()	Set the order in which sections or groups have to be located
RESERVE()	Reserve a part of memory
SECSIZE()	Resize a section
SETNOSGDPP()	Set the pages addressed via each DPP
VECINIT()/NOVECINIT()	Initialize all/used interrupt vectors
VECSCALE()	Set vector table scaling
VECTAB()/NOVECTAB	Create an interrupt vector table

Other controls

CASE/NOCASE	Treat symbols case sensitive/insensitive
CHECKCLASSES / NOCHECKCLASSES	Turn on/off checking for classes which use the CLASSES control
CHECKFIT/NOCHECKFIT	Check if relocatable value fits in space reserved for it.
CHECKMISMATCH / NOCHECKMISMATCH	turn the error into warning when two symbol declarations have different types
EXTEND2/NOEXTEND2	Specify XC16x/Super10 architecture
EXTEND2_SEGMENT191	Specify XC16x/Super10 architecture but do not reserve segment 191.
FIXSTBUS1/NOFIXSTBUS1	Replace JMPS instructions in the vector table with CALL instructions.
GENERAL	All following module scoped controls get a general scope
GLOBALSONLY()	Read only global symbol records from a file
INTERRUPT()	Bind an interrupt vector to a TASK (interrupt) procedure
LIBPATH()	Set a search path for library files
LINK/LOCATE	Initialize link/locate stage
MISRAC()	Generate a MISRA C report
MODPATH()	Set a search path for object files
NAME()	Set the name in the name record of the output file
PUBLICSONLY()	Read only public records from a file
PUBTOGLB()	Promote the PUBLIC scope level to GLOBAL
RESOLVEDPP/NORESOLVEDPP	Translate 24-bit pointers to 16-bit DPP referenced addresses
SET	Manipulation of internal tables
STRICTTASK / NOSTRICTTASK	Strictly follow the Task Concept Allow all extensions on the Task Concept
TYPE/NOTYPE	Turn on/off symbol type checking
WARNING()/NOWARNING()	Turn on/off a warning
WARNINGASERROR / NOWARNINGASERROR	Exit with exit states even if only warnings were generated

9.11.4 OVERVIEW L166 CONTROLS

Control	Abbr	Cl	Def	Description
ASSIGN(*symbol-name*([*datatype*(]*value*[)],...)	AS	G		Define absolute value for symbol.
CASE NOCASE	CA NOCA	G G	setting in assembler	Scan symbols case sensitive. Scan symbols as is.
CHECKMISMATCH NOCHECKMISMATCH	CMM NOCMM	G G	CMM	Turn the error that occurs when two symbol declarations have different types, into a warning.
CODEINROM NOCODEINROM	CIR NOCIR	G G	NOCIR	Force zero-byte code sections in ROM instead of RAM
COMMENTS NOCOMMENTS	CM NOCM	M M	NOCM	Keep version header information. Remove version header information
DATE('date')	DA	G	system	Set date in header of printfile.
DEBUG NODEBUG	DB NODB		DB	Keep debug information. Remove all debug information.
EXTEND2 NOEXTEND2 EXTEND2_SEGMENT191	X2 NOX2 X2191	G G G	NOX2	Specify XC16x/Super10 architecture. Use general C166/ST10 architecture. Use XC16x/Super10, don't reserve segment 191
HEADER NOHEADER	HD NOHD	G G	NOHD	Print print file header page. Do no print header page.
HEAPSIZE (*no. of bytes*[, *no. of bytes forfar heap*])	HS	G	HS(0)	Determine heap size.
LIBPATH(*directory-name*[...])	LN NOLN	M M	OC PC	Keep line number information. Remove line number information.
LINES NOLINES	LN NOLN	M M	OC PC	Keep line number information. Remove line number information.
LINK LOCATE	LNK LOC	G G	LNK	Link object files. Locate.
LISTREGISTERS NOLISTREGISTERS	LRG NOLRG	G G	NOLRG	List register map in print file No register map in print file
LISTSYMBOLS NOLISTSYMBOLS	LSY NOLSY	G G	NOLSY	List symbol table in print file No symbol table in print file

Abbr: Abbreviation of the control
Cl: Class, type of control,
- G means a link/locate general control
- M means a link general/ locate module scope control

Def: Default control
- OC is default for OBJECTCONTROLS
- PC is default for PRINTCONTROLS

Valid *object-control*s;
LINES/NOLINES, COMMENTS/NOCOMMENTS, LOCALS/NOLOCALS, SYMB/NOSYMB,
PUBLICS [EXCEPT(*public-symbol*,...)]/NOPUBLICS [EXCEPT(*public-symbol*,...)], TYPE/NOTYPE,
PURGE/NOPURGE

Valid *print-control*s :
LINES/NOLINES, COMMENTS/NOCOMMENTS, LOCALS/NOLOCALS, SYMB/NOSYMB,
PUBLICS [EXCEPT(*public-symbol*,...)]/NOPUBLICS [EXCEPT(*public-symbol*,...)], PURGE/NOPURGE

Control	Abbr	Cl	Def	Description
LOCALS NOLOCALS	LC NOLC	M M	LC	Keep local symbol information. Remove local symbol information.
MAP NOMAP	MA NOMA	G G	MA	Produce a map in print file. Inhibit production of map.
MISRAC[(*filename*)]	MC	G		Print MISRA C report.
MODPATH(*directory–name* [,...])	MP	G		Define module search path.
NAME(*module–name*)	NA	G	*output*	Define outputs module name.
OBJECTCONTROLS(*object–control*,...)	OC	M		Apply controls to object file only
PAGELENGTH(*length*)	PL	G	60	Set print file page length.
PAGEWIDTH(*width*)	PW	G	132	Set print file page width.
PAGING NOPAGING	PA NOPA	G G	PA	Format print file into pages. Do not format printfile into pages
PRINT [(*filename*)] NOPRINT	PR NOPR	G G	PR locate NOPR link	Print map to named file. Do not generate print file.
PRINTCONTROLS(*print–control*,...)	PC	M		Apply controls to print file.
PUBLICS [EXCEPT(*public–symbol*,...)] NOPUBLICS [EXCEPT(*public–symbol*,...)]	PB NOPB	M M	PB	Keep public symbol records. Remove public symbol records.
PURGE NOPURGE	PU NOPU	M M		Remove all symbolic information. Keep all symbolic information.
RENAMESYMBOLS(*rename–control*,...) *rename control* link stage: EXTERNS({*extrn–symbol* TO *extrn–symbol*},...) PUBLICS({*public–symbol* TO *public–symbol*},...) GROUPS({*groupname* TO *groupname*},...) *rename–control* locate stage: EXTERNS({*extrn–symbol* TO *extrn–symbol*},...) GLOBALS({*global–symbol* TO *global–symbol*},...) INTNRS({*intnr–symbol* TO *intnr–symbol*},...)	RS EX PB GR EX GL IN	M		Rename symbol names. Rename extern symbols. Rename public symbols. Rename groups. Rename extern symbols. Rename global symbols. Rename interrupt names.
SET(*system settings*)	SET	G		Allow manipulation of internal tables.

Abbr: Abbreviation of the control
Cl: Class, type of control,
G means a link/locate general control
M means a link general/ locate module scope control
Def: Default control
OC is default for OBJECTCONTROLS
PC is default for PRINTCONTROLS

Valid *object–control*s;
LINES/NOLINES, COMMENTS/NOCOMMENTS, LOCALS/NOLOCALS, SYMB/NOSYMB,
PUBLICS [EXCEPT(*public–symbol*,...)]/NOPUBLICS [EXCEPT(*public–symbol*,...)], TYPE/NOTYPE,
PURGE/NOPURGE

Valid *print–control*s :
LINES/NOLINES, COMMENTS/NOCOMMENTS, LOCALS/NOLOCALS, SYMB/NOSYMB,
PUBLICS [EXCEPT(*public–symbol*,...)]/NOPUBLICS [EXCEPT(*public–symbol*,...)], PURGE/NOPURGE

Control	Abbr	Cl	Def	Description
SECSIZE(*size-control*,...) *size-control*: *section-name 'class-name'*([+|-] *size*)	SS	M		Specify memory size used by section.
SMARTLINK [([*specification* | EXCEPT(*specification*)] [[,] ...])]	SL	G		Enables the linker/locator to check for unused sections in the output file and removes them if specified in the SMARTLINK control.
SUMMARY NOSUMMARY	SUM NOSUM	G G	 NOSUM	Print summary. Do not print summary.
STRICTTASK NOSTRICTTASK	ST NOST	G G	 NOST	Strict checking of Task Concept. No checking of Task Concept.
SYMB NOSYMB	SM NOSM	M M	OC PC	Keep ?SYMB symbols. Remove ?SYMB symbols.
SYMBOLS NOSYMBOLS	SB NOSB	M M	SB	Keep local symbol information. Remove local symbol information.
SYMBOLCOLUMNS(*number*)	SC	G	2	Define no. of map symbol columns
TITLE(*'title'*)	TT	G	*mod-name*	Set print file page header title.
TO *name*		G		Specify output filename.
TYPE NOTYPE	TY NOTY	G G	TY	Perform type checking. Do not perform type checking.
WARNING[(*warning-control*,...)] NOWARNING[(*warning-control*,...)] *warning-control*: *warn-num* [EXPECT(*exp-num*)]	WA NOWA EXP	G G 	WA	Enable warning messages. Disable warning messages. Expect number of warnings.
WARNINGASERROR NOWARNINGASERROR	WAE NOWAE	G G	 NOWAE	Exit with exit status 4 if warnings only. Exit with exit status 0 if warnings only.

Abbr: Abbreviation of the control
Cl: Class, type of control,
G means a link/locate general control
M means a link general/ locate module scope control
Def: Default control
OC is default for OBJECTCONTROLS
PC is default for PRINTCONTROLS

Valid *object-control*s;
LINES/NOLINES, COMMENTS/NOCOMMENTS, LOCALS/NOLOCALS, SYMB/NOSYMB,
PUBLICS [EXCEPT(*public-symbol*,...)]/NOPUBLICS [EXCEPT(*public-symbol*,...)], TYPE/NOTYPE,
PURGE/NOPURGE

Valid *print-control*s :
LINES/NOLINES, COMMENTS/NOCOMMENTS, LOCALS/NOLOCALS, SYMB/NOSYMB,
PUBLICS [EXCEPT(*public-symbol*,...)]/NOPUBLICS [EXCEPT(*public-symbol*,...)], PURGE/NOPURGE

Table 9-1: Link/locate controls

Control (Link stage only)	Abbr.	Def.	Description
CHECKGLOBALS(*filename* ,...)	CG		Check globals from named files.
PUBLICSONLY(*filename* ,...)	PO		Use only publics from named files.
Abbr: Abbreviation of the control. Def: Defautl.			

Table 9-2: Link controls

Control (Locate stage only)	Abbr	Cl	Def	Description
ADDRESSES(*address-spec*,...)	AD	M		Define address assignment
address-spec:				
SECTIONS({*sect-name* ['*class-name*'] (*address*)},...)	SE	M		Section addresses
	GR	M		Group addresses
GROUPS({*group-name* (*address*)},...)	RB	M		Register bank address
RBANK (*address*)	RB	G		General regbank address
RBANK ({*bank-name* (*address*) },...)	LR	M		Start address linear data section
LINEAR(*address*)				
CLASSES(*class-control*,...)	CL	G		Build class in address range.
class-control:				
['*class-name*['],... ({*address1* {-|TO} *address2* [UNIQUE]},...)				
CHECKCLASSES	CC	G		Check for classes without CLASSES control
(default if ME ROM or RAM is set)				
NOCHECKCLASSES	NOCC	G		Do not check classes
(default if ME ROM/RAM not set)				

Table 9-3: Locate controls

Control (Locate stage only)	Abbr	Cl	Def	Description
CHECKFIT	CF	G	CF	Issue error if recocatable value does not fit in space reserved for it.
NOCHECKFIT	NOCF	G		Issue warning and truncate value.
FIXSTBUS1	FSB1	G		Replace JMPS instr. with CALL instr.
NOFIXSTBUS1	NOFSB1	G	NOFSB1	
GENERAL	GN	G		Treat controls General
GLOBALS	GL	M	GL	Keep global symbol records
NOGLOBALS	NOGL	M		Remove global symbol records
GLOBALSONLY(*filename*,...)	GO	G		Use only globals from name file

Control (Locate stage only)	Abbr	Cl	Def	Description
INTERRUPT(*proc.-descr* (*int.* [TO *int*],...) *proc.-descr*: *proc.-name* TASK(*task-name*) *proc.-name* TASK(*task-name*) *int*: *int-name* *int.-no* *int.-name(int.-no)*	INT	G		Specify interrupt vector
IRAMSIZE(*size*)	IS	G	1K	Specify *size* of internal RAM
MEMORY(*memory-control*,...) *memory-control*: ROM({ *addr1* {TO|-} *addr2* } [{FILLALL|FILLGAPS}(*value*)], ...) RAM({ *addr1* {TO|-} *addr2* }, ...) IRAM IRAM(*addr*) NOIRAM	ME IR IR NOIR	G	ME IR	Specify target memory areas. Target ROM memory Target RAM memory Mark internal RAM memory as RAM Do not mark IRAM as RAM.
MEMSIZE(*size*)	MS	G	256K	Specify total *size* of memory
OVERLAY(*class-name*, ... (*addr1* TO *addr2*))	OVL	G		Overlay class for code memory banking
ORDER(*order-control*,...) *order-control*: SECTIONS({*section-name* ['*class-name*']},...) GROUPS({*group-name* [(*section-name*,...)]},...)	OR SE GR	M		Define section and group order Section names Group names
PUBTOGLB [(*ptog-specifier*,...)] *ptog-specifier*: SECTIONS({*sect-name* ['*class-name*'] },...) GROUPS(*group-name*,...)	PTOG SE GR	M		Convert public to global Global sections Global groups
RESOLVEDPP NORESOLVEDPP	RD NORD	G G		Translate 24-bit pointers to 16 bit DPP referenced addresses

Abbr: Abbreviation of the control.
Cl.: Class, type of locate control, M for Module scope and G for General.
Def: Defautl.

Table 9-3: Locate controls (continued)

Control (Locate stage only)	Abbr	Cl	Def	Description
SETNOSGDPP(*dpp-name*(*value*),...) *dpp-name*: DPP0, DPP1, DPP2, DPP3	SND	G	*value* 0 , 1 , 2 , 3	Locate LDAT sections paged.
RESERVE(*reserve-control*,...) *reserve-control*: MEMORY({*address1 - address2*},...) PECPTR({*pecptr1* [- *pecptr2*]},...) INTTBL({*intno1* [- *intno2*]},...) SYSSTACK(*stackno*)	RE ME PP IT SY	G		Prevent locating in reserved areas. Reserve any memory range Reserve PEC pointer memory Reserve interrupt table memory Reserve system stack mem.
TASK [(*task-name*)] [INTNO {[*int.-name*][= *int.-no*]}] *input-file* [*task-controls*]				Set taskname and intno belonging to input file.
VECINIT [(proc-name|address)] NOVECINIT	VI NOVI	G G	VI	Init unused interrupt vectors. No int. vector init.
VECSCALE(*scaling*)	VS	G		Specify scaling to use in vector table
VECTAB[(*base_address*[,*last-vector-number*])] NOVECTAB	VT NOVT	G G	VT	Generate interrupt vector table. Don't generate interrupt vector table.
Abbr: Abbreviation of the control. Cl.: Class, type of locate control, M for Module scope and G for General. Def: Defautl.				

Table 9-3: Locate controls (continued)

The following section contains an alphabetical description of all **l166** controls. The kind of control is indicated by the Class.

With controls that can be set from within EDE, you will find a mouse icon that describes the corresponding action.

9.11.5 DESCRIPTION OF CONTROLS

ADDRESSES

Control:

From the **Project** menu, select **Project Options...**
Expand the **Linker/Locator** entry and select **Locate Absolute**.
Click in an empty **Object** column and select **Section**, **Group** or **Register bank**. Click in the **Name** column and enter a name for the object. In the **Address** column enter the address of the object.

ADDRESSES(*address-spec*,...)

or

ADDRESSES *address-spec*

Abbreviation:

AD

Class:

Locate module scope

Default:

-

Description:

With this control you can override the default *address* assignment algorithm. When the parentheses are omitted only one *address-spec* may be specified. *address-spec* can be specified as:

SECTIONS({*sect-name* ['*class-name*'] (*address*) },...)
GROUPS({*group-name* (*address*) },...)
RBANK(*address*)
RBANK({ *bank-name* (*address*) },...)
LINEAR(*address*)

The abbreviations are respectively: SE, GR, RB, LR.

A beginning *address* can be assigned to sections or groups. The subcontrols SECTIONS and GROUPS, identify exactly what elements of the input module are assigned addresses. When assigning an *address* with the SECTIONS subcontrol, the *class-name* of the particular section can be assigned, if defined.

With the RBANK subcontrol you can set the *address* of a register bank. When using the register *bank-name*, the control is treated as a general control, otherwise the bank in the module before the ADDRESSES RBANK control in the invocation is assigned. When the *bank-name* is not supplied, and the module contains more than one register definition the locator issues an error. When the STRICTTASK control is set the locator issues an error when the *bank-name* is supplied.

Using the module scope switch in the ADDRESSES control is allowed at the following syntactical locations:

ADDRESSES(**{*module-name*** *address-spec* **}**,...)

address-spec:

SECTIONS(**{*module-name*** *sect-name*
['*class-name*'] (*address*) **}**,...)
GROUPS(**{*module-name*** *group-name* (*address*) **}**,...)
RBANK(*address*)
RBANK(**{*module-name*** *bank-name* (*address*) **}**,...)
LINEAR(*address*)

When the scope is set to GENERAL the locator will search for *sect-name*, *group-name* and *bank-name* in all modules. When there is more than one match a warning will be issued and the control is applied to the first match.

Using global sections (GLOBAL, COMMON, SYSSTACK or GLBUSRSTACK) in ADDRESSES SECTIONS causes the ADDRESSES control to be a general control for that section.

Using a global group in ADDRESSES GROUP causes the ADDRESSES control to be a general control for that group.

With the LINEAR subcontrol you can set the start *address* of the linear sections (LDAT, up to 48K accessible via DPP0 to DPP2).
Although the ADDRESSES control is a task control, the ADDRESSES LINEAR control has a general scope.
The ADDRESSES LINEAR control cannot be used in conjunction with the SETNOSGDPP control.

If a section, group, register bank or linear address is multiply assigned by the ADDRESSES control a warning is issued and the assignment is ignored.

If the specified *address* does not agree with the alignment attribute of the specified section, the *address* is modified and a warning is issued.

A special section name "SYSSTACK" is available to relocate the system stack when using the XC16x/Super10 architecture.

Example:

```
addresses sections( Dsec1 (1000H))

ad se( Dsec2 'Class2' (0300H) )

ad lr(page 5)

ad( rb(0FC00H), se(Csec (page 1)) )

addresses rbank( REGB1( 0FC00h ), REGB2(0FC40h ) )

AD( SE( {fil1.obj SECTA(200h)}
        {fil2.obj SECTB(400h)} )
    RB( {fil1.obj REGB1( 0FC00h )} ) )

AD( SE( SYSSTACK( segment(1) + 0FC00h ) ) )
```

ASSIGN

Control:

From the **Project** menu, select **Project Options...**
Expand the **Linker/Locator** entry and select **Symbols**.
Click in an empty **Symbol name** column and enter a symbol name. In the **Value** column enter the absolute value for the symbol.

ASSIGN(*symbol-name* ([*datatype*(] *value* [)], ...)

Abbreviation:

AS

Class:

Link/Locate general

Default:

-

Description:

With this control you can define absolute *values* for *symbols* at link stage. The *symbol-name* is internally defined as a PUBLIC symbol (link stage) or GLOBAL symbol (locate stage) and, therefore can be accessed only inside of a task. The *symbol-name* is the name of a variable, label or constant that is defined using this control. The *value* can be an absolute expression. If the *symbol-name* has a matching public or global definition in another module, the public or global definition in that module is flagged as a duplicate. Whenever a reference to the *symbol-name* occurs, the symbol defined in the ASSIGN control governs. If multiple ASSIGN specifications are provided in one invocation, all are effective (not only the last entry). This control is particularly useful for memory-mapped I/O.

By default, the assigned symbol has no type. This could lead to type mismatch warnings (W 120) if the assigned symbol is referenced in an external module using the GLOBALSONLY control. To avoid these warnings, a type can be specified with the assigned symbol. The mismatch warning will still be given if the assigned type does not match with the type of the external symbol in the second module.

Valid datatypes to be specified with ASSIGNed symbols are: NEAR, FAR, BYTE, WORD, BIT, BITWORD, DATA3, DATA4, DATA8 and DATA16.

Example:

```
l166 link x.obj as( userpb1(1ah), userpb2(1234) )
```

CASE

Control:

From the **Project** menu, select **Project Options...**
Expand the **Assembler** entry and select **Miscellaneous**.
Enable the **Operate in case sensitive mode** check box.

CASE / NOCASE

Abbreviation:

CA / NOCA

Class:

Link/Locate general

Default:

Depends on the CASE/NOCASE flag in the first input module. This means that if CASE or NOCASE is not used in the linker/locator invocation, the control is set to the setting of the CASE/NOCASE control in the assembler.

The C compiler always sets the control to CASE.

Description:

Selects whether **l166** operates in case sensitive mode or not. In case insensitive mode **l166** maps characters of symbol names on input to uppercase.

Example:

```
l166 link x.obj case

; l166 in case sensitive mode
```

CHECKCLASSES

Control:

From the **Project** menu, select **Project Options...**
Expand the **Linker/Locator** entry and select **Diagnostics**.
Enable the **Warn for classes without a class range** check box.

CHECKCLASSES / NOCHECKCLASSES

Abbreviation:

CC / NOCC

Class:

Locate general

Default:

CHECKCLASSES	When control MEMORY ROM or RAM is not set.
NOCHECKCLASSES	When control MEMORY ROM or RAM is set.

Description:

CHECKCLASSES indicates that the locator has to check if all classes are located by using the CLASSES control. NOCHECKCLASSES disables this check. If CHECKCLASSES is active and a class without the CLASSES control is found the locator issues the warning W 193.

Example:

```
l166 locate task intno=0 x.lno checkclasses

; check for classes without CLASSES control
```

CHECKFIT

Control:

From the **Project** menu, select **Project Options...**
Expand the **Linker/Locator** entry and select **Miscellaneous**.
Add the control to the **Additional locator controls in control file (.ilo)** field.

CHECKFIT / NOCHECKFIT

Abbreviation:

CF / NOCF

Class:

Locate general

Default:

CHECKFIT

Description:

The locator issues an error when a relocatable value is obtained that does not exactly fit inside the space reserved for it. In versions prior to v7.5r1 a warning was issued, while the result would be truncated. If your project relies on the truncated result you can use the NOCHECKFIT control to reinstate the old behavior of generating a warning. You can then use the NOWARNING control to suppress these warnings.

Example:

```
l166 locate task intno=0 x.lno nocheckfit

; generate warning and truncate value,
; if value does not fit
```

CHECKGLOBALS

Control:

CHECKGLOBALS(*filename*, ...)

Abbreviation:

CG

Class:

Link Only

Default:

-

Description:

The linker reads the global symbol records from the named files and checks if these symbols will resolve any externs during the locate stage. The linker now does not issue warnings on the symbols which remain unresolved after linking, but will be resolved during the locate stage.

Example:

```
l166 link x.obj cg(y.obj)
l166 link x.obj cg(y.lno)

; l166 checks for global symbol records
```

CHECKMISMATCH

Control:

From the **Project** menu, select **Project Options...**
Expand the **Linker/Locator** entry and select **Miscellaneous**.
Add the control to the **Additional locator controls in control file (.ilo)** field.

CHECKMISMATCH / NOCHECKMISMATCH

Abbreviation:

CMM / NOCMM

Class:

Link/locate general

Default:

CHECKMISMATCH

Description:

When two declarations of a symbol have a different type, the linker/locator issues error E 408, E 409 or E 410. For backwards compatibility, you can turn this error into a warning with NOCHECKMISMATCH. You can use the WARNING control then to suppress this warning.

Example:

```
l166 locate x.lno NOCMM  ; only warn if
                         ; symbol types do not match
```

CLASSES

Control:

From the **Project** menu, select **Project Options...**
Expand the **Linker/Locator** entry and select **Classes**.
Specify one or more classes in the **Class ranges** box.

CLASSES(*class-control*,...)

Abbreviation:

CL

Class:

Locate general

Default:

-

Description:

class-control must be specified as:

['']*class-name*[''],... ({*address1* {- | TO} *address2* [UNIQUE]},...)

The CLASSES control tells the locator to build a single class of all the classes given and to place this class in the address range given by *address1* and *address2*. The single quotes around each class name in the classes control are optional.
Constructions like CLASSES(CLASS1 CLASS2 (1000h TO 4000h)) are valid.

When more than one address range is given for a class, overlapping and adjacent ranges are treated as one range. When the sections in a class are ordered by means of the ORDER SECTIONS control, the whole ORDER has to fit in one address range.

When you specify the keyword UNIQUE (abbreviation UN), the locator locates only this class in the specified range. When all sections with a CLASSES control are located, the locator reserves the remaining ranges with UNIQUE control. The map file lists these as 'Reserved'

Note that when none of the specified classes can be found at all, the locator ignores the keyword UNIQUE.

You can mix UNIQUE and non-UNIQUE ranges. The locator tries to locate sections in the first range, irrespective of the use of the UNIQUE keyword. This may result in the use of a non-UNIQUE range, while a UNIQUE range is left untouched. The locator does not merge UNIQUE and non-UNIQUE ranges, so sections cannot be located partly in a UNIQUE and partly in a non-UNIQUE range.

Example:

```
classes( 'ROM' (100H to 1FFFH),
         'RAM_1', "RAM_2" (0FA00H to 0FDFFH))

classes( CLASS1 CLASS2 ( 1000h TO 4000h ))

classes(
     CODEROM,
     ROMDATA ( 0 TO 07FFFh, 10000h TO 17FFFh )
     RAMDATA ( 8000h TO 0FFFFh, 18000h TO 1FFFFh )
 )

classes(
     CODEROM,
     ROMDATA ( 0 TO 07FFFh, 10000h TO 17FFFh )
     RAMDATA ( 8000h TO 0FFFFh, 18000h TO 1FFFFh UN )
 )
```

CODEINROM

Control:

From the **Project** menu, select **Project Options...**
Expand the **Linker/Locator** entry and select **Miscellaneous**.
Add the control to the **Additional locator controls in control file (.ilo)** field.

CODEINROM / NOCODEINROM

Abbreviation:

CIR / NOCIR

Class:

Locate general

Default:

CODEINROM

Description:

The CODEINROM control forces the locator to put all code sections in ROM memory. In versions older than v7.5r2, the locator puts code sections of size 0 into RAM. Using NOCODEINROM will switch back to that behavior.

Example:

```
; Put code sections of 0 bytes into RAM
l166 link x.obj nocodeinrom
```

COMMENTS

Control:

From the **Project** menu, select **Project Options...**
Expand the **Linker/Locator** entry and select **Miscellaneous**.
Add the control to the **Additional locator controls in control file (.ilo)** field.

COMMENTS / NOCOMMENTS

Abbreviation:

CM / NOCM

Class:

Link/Locate module scope

Default:

NOCOMMENTS

Description:

COMMENTS keeps the version header information in the object file. NOCOMMENTS removes this information. The COMMENTS control is useful to determine which version of **l166** is used for building the object file.

Example:

```
; Version header information in object file
l166 link x.obj comments

; No version header information in object file
l166 locate task intno=0 x.lno nc
```

DATE

Control:

From the **Project** menu, select **Project Options...**
Expand the **Linker/Locator** entry and select **Map File**.
In the **Locator map file** box, select **Default name** or **Name map file**.
Expand the **Map File Format** entry and enter a date in the **Date in page header** field.

DATE('*date*')

Abbreviation:

DA

Class:

Link/Locate general

Default:

system date

Description:

l166 uses the specified date-string as the date in the header of the print file. Only the first 11 characters of string are used. If less than 11 characters are present, **l166** pads them with blanks.

Example:

```
; Nov 25 2004 in header of print file
l166 link x.obj date('Nov 25 2004')

; 25-11-04 in header of print file
l166 locate task intno=0 x.lno da('25-11-04')
```

DEBUG

Control:

From the **Project** menu, select **Project Options...**
Expand the **Linker/Locator** entry and select **Symbols**.
Enable the **Keep debug information** check box.

DEBUG / NODEBUG

Abbreviation:

DB / NODB

Class:

Link/Locate general

Default:

DEBUG

Description:

When DEBUG is set the amount of symbol information is determined by the

COMMENTS/NOCOMMENTS, LINES/NOLINES
PUBLICS/NOPUBLICS, GLOBALS/NOGLOBALS
LOCALS/NOLOCALS and SYMB/NOSYMB

controls.

When NODEBUG is set, as less as possible symbol records are generated. NODEBUG does not affect the settings by the mentioned controls, so when DEBUG is set after a NODEBUG control they are in effect as they were set. This is different from PURGE/NOPURGE which turns all controls mentioned above (plus the TYPE/NOTYPE control) on or off. The link stage always generates at least the symbol records needed for locating even when NODEBUG is in effect.

Example:

```
l166 link x.obj y.obj nodebug

; do not generate debug records
```

EXTEND2

Control:

From the **Project** menu, select **Project Options...**
Expand the **Application** entry and select **Processor**.
From the **Processor** box, select a processor or select **User Defined**.
If you selected **User Defined**, expand the **Processor** entry and select **User Defined Processor**. Select **XC16x/Super10** in the **Instruction set** box

EXTEND2 / NOEXTEND2 / EXTEND2_SEGMENT191

Abbreviation:

X2 / NOX2 / X2191

Class:

Link/Locate general

Default:

NOEXTEND2

Description:

The XC16x/Super10 architecture has very specific restrictions on memory usage with respect to the basic C166/ST10 architecture. With the EXTEND2 control the following or extension are in effect:

- no code memory may be located in page 2 & 3 of segment 0. If code is located there explicitly (using the ADDRESSES control or AT in the assembly or C file), a warning is generated.
- the system stack may be located anywhere using the `AD ( SE( SYSSTACK ( location ))))` control
- the PEC pointers are moved, PEC pointer space is reserved if a PEC pointer is not used.
- segment 191 (0BFh) is reserved.
- vector table scaling is enabled.

With the EXTEND2_SEGMENT191 control segment 191 is not reserved, but the other restrictions/extensions are enabled.

Examples:

```
l166 link x.obj x2  ; check PEC pointer usage
l166 loc  x.obj x2  ; do not locate code in page 2/3
```

FIXSTBUS1

Control:

From the **Project** menu, select **Project Options...**
Expand the **Application** entry, expand the **Processor** entry and select **CPU Problem Bypasses**. Select **Custom settings** and enable the **Generate STBUS.1 bypass code** check box.
Expand the **Linker/Locator** entry and select **Interrupt Vector Table**. Enable the **Generate vector table** check box.

FIXSTBUS1 / NOFIXSTBUS1

Abbreviation:

FSB1 / NOFSB1

Class:

Locate general

Default:

NOFIXSTBUS1

Description:

The ST_BUS.1 problem occurs when a PEC transfer is initiated just after a JMPS instruction. By protecting the JMPS instruction using an ATOMIC instruction, or using CALLS, POP, POP as replacement for JMPS, the problem can be circumvented.

The compiler implements a problem fix for the ST_BUS.1 problem by protecting the JMPS instructions. However, the vector table is normally composed of JPMS instructions and the space available is too small for an ATOMIC instruction as well.

The FIXSTBUS1 will replace the JMPS instructions in the vector table with CALLS instructions. The interrupt handler entered this way must issue two POP instructions before returning. Failure to do so will lead to consecutive interrupt calling, as each RETI will put the program counter at the next interrupt CALLS statement.

The reset vector, located at 00'0000, is always entered in supervisor mode. No PEC transfers occur in this mode and so the instruction at 00'0000 can always be a JMPS. The FIXSTBUS1 control starts replacing JMPS with CALLS after the reset vector. When both the FIXSTBUS1 and VECINIT are up, then the vectors after the reset vector are initialized with JMPA to enter an endless loop.

If the NOVECTAB control is up, FIXSTBUS1 has no effect.

Interrupt service routines written in assembly must delete the return address generated by the CALLS instruction from the system stack. Always insert the ADD SP,#04h instruction before the end of the ISR when using the FIXSTBUS1 control. The C compiler performs this instruction automatically when the **-BJ** option is in effect.

Example:

```
l166 loc  x.obj y.obj fixstbus1

;output vector table (default) with replaced
;JMPS instructions
```

GENERAL

Control:

From the **Project** menu, select **Project Options...**
Expand the **Linker/Locator** entry and select **Miscellaneous**.
Select **Use Flat interrupt concept (link and locate in one phase)**.

GENERAL

Abbreviation:

GN

Class:

Locate general

Default:

-

Description:

All module scope controls specified after the GENERAL control in the invocations are treated as general controls. This means that these controls now apply to all input modules. The GENERAL control can also be used in the module scope switch:

{GENERAL} or {GENERAL *controls* }

Example:

```
LOCATE file1.obj file2.obj
GENERAL
NOLOCALS  ; strip locals from all input modules
ADRESSES SECTIONS( sect1(200h) )
 ; search for sect1 in all input modules
```

GLOBALS

Control:

From the **Project** menu, select **Project Options...**
Expand the **Linker/Locator** entry and select **Miscellaneous**.
Add the control to the **Additional locator controls in control file (.ilo)** field.

GLOBALS / NOGLOBALS

Abbreviation:

GL / NOGL

Class:

Locate module scope

Default:

GLOBALS

Description:

GLOBALS specifies to generate global symbol records when the DEBUG control is in effect. NOGLOBALS removes global symbol information from the output file.

Example:

```
l166 locate task intno=0 x.lno nogl

; remove global symbol information
```

GLOBALSONLY

Control:

From the **Project** menu, select **Project Options...**
Expand the **Linker/Locator** entry and select **Miscellaneous**.
Add the control to the **Additional locator controls in control file (.ilo)** field.

GLOBALSONLY(*filename*,...)

Abbreviation:

GO

Class:

Locate general

Default:

-

Description:

GLOBALSONLY indicates that only the absolute global symbol records of the argument files are used. The other records in the module are ignored. This can be used to resolve external references to C166/ST10 files. *filename* can be the name of a file optionally preceded by a directory path name.

Example:

```
l166 loc myappl.lno go( kernel.out ) to myappl.out

; use only globals of kernel.out
```

HEADER

Control:

From the **Project** menu, select **Project Options...**
Expand the **Linker/Locator** entry and select **Map File**.
In the **Locator map file** box, select **Default name** or **Name map file**.
Expand the **Map File Format** entry and enable the **List header page** check box.

HEADER / NOHEADER

Abbreviation:

HD / NOHD

Class:

Link/Locate general

Default:

NOHEADER

Description:

This control specifies if a header page must be generated as the first page in the print file. A header page consists of a page header (the linker/locator name, the date, time and the page number, followed by a title), linker/locator invocation.

Example:

```
l166 link x.obj print hd

; generate header page in print file
```

HEAPSIZE

Control:

From the **Project** menu, select **Project Options...**
Expand the **Linker/Locator** entry and select **Stack and Heap**.
Specify the number of bytes in the **Heap size for malloc() and new** field.

HEAPSIZE(*no. of bytes*[, *no. of bytes for far heap*])

Abbreviation:

HS

Class:

Link/Locate general

Default:

HEAPSIZE(0)

Description:

HEAPSIZE allows you to specify the size of the heap needed for the C library. *No. of bytes* is the size of the heap in bytes. The *no. of bytes* is used for the section ?C166_NHEAP or ?C166_FHEAP, depending on which heap is required. If both heaps are required (due to usage of both the near and far variants of the memory allocation routines), the size will be applied to both heaps. If two sizes are supplied, the first size is for the near heap and the second for the far heap.

The ?C166_NHEAP section will only be created when one of the symbols ?C166_NHEAP_TOP or ?C166_NHEAP_BOTTOM is referred. The same counts for the ?C166_FHEAP section when ?C166_FHEAP_TOP or ?C166_FHEAP_BOTTOM is referred. The default size is zero bytes. The size of a ?C166_NHEAP or ?C166_FHEAP section can only be set when it is created. This means that when HEAPSIZE is used in the locator stage it only affects the size of the GLOBAL ?C166_NHEAP or ?C166_FHEAP section created by the locator.

It is possible to set the ?C166_NHEAP size during linking and to set the ?C166_FHEAP size during locating, but not if the modules that are linked require both heaps. If all modules that are linked only require one variant of the heap, the HEAPSIZE control is applied only to that heap and only that heap is created. In a subsequent locating step, the other heap can be created and sized appropiately.

If a ?C166_NHEAP or ?C166_FHEAP section would have to be created by the linker, but the size would be zero, the creation is skipped. This means that the locator will have to create this section. If the heap size is still zero, the locator will generate an error.

See the section 9.10, *Predefined Symbols* in this chapter for more information about the heap symbols and the ?C166_NHEAP and ?C166_FHEAP section.

Example:

```
HEAPSIZE( 70 )    ; allocate 70 bytes for the heap
```

INTERRUPT

Control:

From the **Project** menu, select **Project Options...**
Expand the **Linker/Locator** entry and select **Interrupt Vector Table**.
Enable the **Generate vector table** check box. Enter one or more interrupt vector specifications in the **Interrupt vectors** box.

INTERRUPT(*proc-descr* (*int* [TO *int*],...)

Abbreviation:

INT

Class:

Locate general

Default:

-

Description:

With the INTERRUPT control you can specify the interrupt vector to be used for a TASK or INTERRUPT procedure. This control is more flexible than the Infineon compatible TASK...INTNO control.

proc-descr is one of:

proc-nam
TASK(*task-name*)
task-name TASK(*task-name*)

proc.-name name of a TASK procedure
task-name the name of the TASK

int is one of:

int.-name
int.-no
int.-name (*int.-no*)

int.-name optional interrupt name, will be printed in map file
int.-no. interrupt number

When the *proc.-name* is supplied, task names, interrupt names and interrupt number of the interrupt already defined in the assembly file are overruled by the *task-name*, *int.-name* and *int.-no.* When the *proc.-name* is not supplied, the *task-name* should be the name of a task existing in the object file or a name previously assigned by an INTERRUPT or TASK...INTNO control. The interrupt name and interrupt number already defined in the assembly file are overruled by the *int.-name* and *int.-no.*

The interrupt name of a range will be the name of the lowest interrupt number or none if that interrupt has no name.

When the range modifier is used, the original interrupt occupied by the task is still used. When no interrupt has been assigned during the assemble or link stage, the locator complains about an unassigned interrupt. First assign a valid interrupt to the task and then extend the range, assigning new interrupt names if so desired.

Example:

```
INTERRUPT(proc1(10),            ; vector 10 points to proc1
    TASK2(20),                  ; vector 20 point to
                                ; the task  TASK2
    proc3(RESET(0)),            ; vector 0 is named
                                ; RESET and points to proc3
    proc4 TASK( T4) ( INTX(32) ),
        ; interrupt 32 is named INTX and points to a task
        ; named T4, implemented by proc4
    proc5(15 TO 16),
        ; interrupts 15 and 16 are handled by task proc5
    proc6(LOW6(18) TO HIGH6(20)),
        ; interrupts 18, 19 and 20 are handled by task proc6,
        ; symbols LOW6 and HIGH6 contain values 18 and 20 resp.
    proc7(120),
    proc7(121 TO 126)
        ; proc7's original interrupt is moved to 120 and
        ; interrupts 121 to 126 are assigned to proc7 as well.
 )
```

IRAMSIZE

Control:

From the **Project** menu, select **Project Options...**
Expand the **Linker/Locator** entry and select **Memory**.
Enable the **Mark internal RAM area as RAM** check box.

IRAMSIZE(*size*)

Abbreviation:

IS

Class:

Locate general

Default:

IRAMSIZE(1024)

Description:

IRAMSIZE allows you to specify the maximum size of the internal RAM area that can be available for locating. *size* is the size of the internal RAM area in bytes. This control is useful if you want to extend the internal RAM area, e.g. when using a C16x/ST10. For the C166/ST10 the default size of the internal RAM is 1K. For the C16x/ST10 this value is 2K. Note that the space for the internal SFRs and virtual GPRs is not included in this size.

The internal RAM size can also be set with the MEMORY IRAM control.

Example:

```
IRAMSIZE( 2048 )   ; allocate 2 Kbytes for  internal RAM
```

LIBPATH

Control:

From the **Project** menu, select **Directories...**
Add one or more directory paths to the **Library Files Path** field.

LIBPATH(*directory-name* [, *directory-name*]...)

Abbreviation:

LP

Class:

Link/Locate general

Default:

None

Description:

With LIBPATH you can designate one or more *directory-name*s to be used as the first search path for library files. If the searched library file is not found in the first directory specified in LIBPATH, it searches in the next directory in the list. If the searched library file is not found in any of the directories specified in LIBPATH, **l166** searches in the actual directory.

It is also possible to use single 'quotes' to use filenames and directories with spaces in them.

See also section 9.8 *Default Object and Library Directories*.

Example:

```
l166 link util.lib x.obj libpath(c:\lib\c166, c:\mylib)

; util.lib is first searched for in the
; specified directories.

l166 link util.lib x.obj
     libpath('c:\program files\c166\lib\166')

; the specified directory contains a space
```

LINES

Control:

From the **Project** menu, select **Project Options...**
Expand the **Linker/Locator** entry and select **Miscellaneous**.
Add the control to the **Additional locator controls in control file (.ilo)** field.

LINES / NOLINES

Abbreviation:

LN / NOLN

Class:

Link/Locate module scope

Default:

LINES	for OBJECTCONTROLS
NOLINES	for PRINTCONTROLS

Description:

LINES keeps line number information in the object file. This information can be used by high level language debuggers. LINES specifies **l166** to generate symbol records defined by the ?LINE and ?FILE directives of the assembler when the DEBUG control is in effect. The line number information is not needed to produce executable code. The NOLINES control removes this information from the output file. NOLINES decreases the size of the output object file.

See also OBJECTCONTROLS, PRINTCONTROLS, PURGE/NOPURGE.

Examples:

```
l166 link x.obj lines debug
; keep line number information in output
; module and print file.
```

Is the same as:

```
l166 link x.obj oc(ln) pc(ln) debug
```

LINK/LOCATE

Control:

LINK / LOCATE

Abbreviation:

LNK / LOC

Class:

Link/Locate general

Default:

LINK

Description:

LINK explicitly tells **l166** to start the link stage. LOCATE explicitly tells **l166** to start the locate stage. These controls merely improve the readability of command lines. When used these controls must be the first control.

Examples:

```
l166 link x.obj y.obj case to xy.lno  ; allowed
l166 locate task intno=0 xy.lno       ; allowed

l166 x.obj y.obj case link to xy.lno  ; error!
l166 task intno=0 xy.lno locate       ; error!
```

LISTREGISTERS

Control:

From the **Project** menu, select **Project Options...**
Expand the **Linker/Locator** entry and select **Map File**.
In the **Locator map file** box, select **Default name** or **Name map file**.
Expand the **Map File Format** entry and enable the **Generate register map** check box.

LISTREGISTERS / NOLISTREGISTERS

Abbreviation:

LRG / NOLRG

Class:

Link/Locate general

Default:

NOLISTREGISTERS

Description:

This control specifies if a register map must be generated in the print file. A register map at link stage contains information about all common and private areas in a register bank. A register map at locate stage contains information about all register bank combinations.

See the Appendix *Linker/Locator Output Files* for detailed information about the register maps.

Example:

```
l166 link x.obj print lrg

; generate register map in print file x.lnl
```

LISTSYMBOLS

Control:

From the **Project** menu, select **Project Options...**
Expand the **Linker/Locator** entry and select **Map File**.
In the **Locator map file** box, select **Default name** or **Name map file**.
Expand the **Map File Format** entry and enable the **Generate symbol table** check box.

LISTSYMBOLS / NOLISTSYMBOLS

Abbreviation:

LSY / NOLSY

Class:

Link/Locate general

Default:

NOLISTSYMBOLS

Description:

This control specifies if a symbol table must be generated in the print file. A symbol table contains information about the name of the symbol, the number of the symbol, the value of the symbol and the type of the symbol. The symbols are listed in alphabetical order.

See the Appendix *Linker/Locator Output Files* for detailed information about the symbol table.

Example:

```
l166 link x.obj print lsy

; generate symbol table in print file x.lnl
```

LOCALS

Control:

From the **Project** menu, select **Project Options...**
Expand the **Linker/Locator** entry and select **Miscellaneous**.
Add the control to the **Additional locator controls in control file (.ilo)** field.

LOCALS / NOLOCALS

Abbreviation:

LC / NOLC

Class:

Link/Locate general

Default:

LOCALS for both OBJECTCONTROLS and PRINTCONTROLS

Description:

LOCALS specifies to generate local symbol records when the DEBUG control is in effect. The debugger uses this information. It is not needed to produce executable code. When NOLOCALS is set **l166** does not generate local symbol records. LOCALS/NOLOCALS is the equivalent of the Infineon controls SYMBOLS/NOSYMBOLS.

See also OBJECTCONTROLS, PRINTCONTROLS, PURGE/NOPURGE.

Example:

```
l166 link x.obj y.obj nolocals

; do not generate local symbol records
```

MAP

Control:

From the **Project** menu, select **Project Options...**
Expand the **Linker/Locator** entry and select **Map File**.
In the **Locator map file** box, select **Default name** or **Name map file**.
Expand the **Map File Format** entry and enable the **Generate section map** check box.

MAP / NOMAP

Abbreviation:

MA / NOMA

Class:

Link/Locate general

Default:

MAP

Description:

Use this control to enable (MAP) or prevent (NOMAP) generation of a memory map, symbol table and register map in the print file. The memory map at link stage contains information about the attributes of logical sections in the output module. This includes size, class, alignment attribute and address if the section is absolute. The memory map at locate stage shows the complete section, group and class name start address, and stop address and other information like reserved areas, interrupt vectors, pec-pointers etc. The symbol table contains a list of all symbols used. The register map shows the combination of all register definitions. PRINT must be enabled. If NOPRINT is specified the MAP-setting is ignored (no print file is generated).

Example:

```
l166 link x.obj nomap

; do not generate link map in print file
```

MEMORY

Control:

From the **Project** menu, select **Project Options...**
Expand the **Linker/Locator** entry and select **Memory**.
Specify one or more memory areas in the **Memory areas** box. Optionally, disable the **Mark internal RAM area as RAM** check box.

MEMORY(*memory-control*, ...)

or

MEMORY *memory-control*

Abbreviation:

ME

Class:

Locate general

Default:

MEMORY(IRAM)

Description:

With the MEMORY control you can specify which areas in the target memory are ROM, RAM or internal RAM.

memory-control must be specified as:

ROM({ *addr1* {TO | -} *addr2* } [{FILLALL | FILLGAPS}(*value*)], ...)

RAM({ *addr1* {TO | -} *addr2* }, ...)

IRAM abbreviation: IR

IRAM(*addr*) abbreviation: IR

NOIRAM abbreviation: NOIR

The arguments *addr1* and *addr2* specify the first and last address in a range.

With the **ROM** sub-control you can specify which address ranges are ROM. All sections and other memory elements with the ROM attribute will only be located in these ranges. When the ROM sub-control is not specified, all ranges which are not RAM or IRAM are specified as ROM.

You can specify a byte or word size fill *value* for gaps between sections or for the whole memory range. With FILLGAPS(*value*) attribute, only gaps between sections are filled. Such gaps are introduced for example by section alignment, certain section orders or absolute sections. With the FILLALL(*value*) attribute all unused areas in the specified ROM range are filled with the value. The value can be a value of one byte or one word. With a word value, the high byte is used to fill the even addresses and the low byte is used to fill the odd addresses. In case the high byte is zero the value should be represented as hex pattern enclosed in single quotes.

Some example values are:

`0xFF` byte fill value

`0xA55A` word fill value, odd addresses are filled with 5A, even addresses are filled with A5

`0x00FF` same as 0xFF

`0FFh` same as 0xFF

`255` same as 0xFF

`'00FF'` word fill value with zeros on even addresses and FF on odd addresses.

With the **RAM** sub-control you can specify which address ranges are RAM. All sections and other memory elements with the RAM attribute will only be located in these ranges. When the RAM sub-control is not specified, all ranges which are not ROM are specified as RAM.

When you specify the **IRAM** sub-control (default), the locator marks the internal RAM area as RAM. The size of the internal RAM is specified with the IRAMSIZE control. When the IRAM sub-control is specified with the *addr* argument, the start address of the internal RAM is specified. The end address of the internal RAM is always 0FFFFh. When *addr* is specified it overrules a previous (or the default) IRAMSIZE control. The *addr* argument should be lower than 0FE00h to ensure the SFR area can always be located.

When you specify the **NOIRAM** sub-control, the locator does not mark the internal RAM as a RAM range. This allows you to place code in internal RAM, which is for instance needed for bootstrap code.

A section or memory element gets the ROM attribute when it contains initialized memory, otherwise it gets the RAM attribute. In the assembler there are only a few directives which allocate not initialized memory: DBIT, DS, DSB, DSW, DSDW, ORG and EVEN in a section other than CODE.

When the ROM or the RAM sub-control is used the memory layout is defined and the CLASSES control is superfluous, so the locator sets the control NOCHECKCLASSES.

Example:

```
MEMORY( ROM( 0h TO 3fffh, 8000h TO 0BFFFh ),
        RAM( 4000h TO 7FFFh, 0C000h TO 0FFFFh ) )
MEMORY NOIRAM
MEMORY( ROM( 0h TO 7fffh ),
       RAM( 8000h TO 0FFFFh )
       IRAM( 0F600h )
       ROM( 10000h TO 13fffh ) )

MEMORY ROM( 0x000000 TO 0x007FFF FILLGAPS(0xFF) )
; fill gaps between sections with FF

MEMORY ROM( 0x000000 TO 0x007FFF FILLALL(0x9B00) )
; fill whole range with TRAP #0 instructions
```

MEMSIZE

Control:

From the **Project** menu, select **Project Options...**
Expand the **Linker/Locator** entry and select **Memory**.
In the **Total memory size** field, select **Processor defined** or enter a memory size in bytes.

MEMSIZE(*size*)

Abbreviation:

MS

Class:

Locate general

Default:

MEMSIZE(01000000h) if EXTMEM specified in objects

Description:

MEMSIZE allows you to specify the maximum size of the total memory area that can be available for locating. *size* is the size of the total memory area in bytes. This control is useful if you want to limit the memory area.

The default memory size is 16 Mbytes.

Example:

```
MEMSIZE( 020000h )    ; total memory is 128 Kbytes
```

MISRAC

Control:

From the **Project** menu, select **Project Options...**
Expand the **C Compiler** entry and select **MISRA C**.
Select a MISRA C configuration. Enable the **Produce a MISRA C report** check box.

MISRAC[(*filename*)]

Abbreviation:

MC

Class:

Link/Locate general

Default:

-

Description:

If the MISRAC control is specified, a report will be generated specifying the MISRA C checks used during C compilation for each module used while linking or locating. This is done in a cross reference table.

A separate list of modules without MISRA C checks is printed below the table. A report filename may be specified. By default, the report name is the output filename with a ".mcr" suffix.

The linker will pass MISRA C settings to the resulting output file. The set of MISRA C checks of the linked file is the lowest common denominator of all the checks specified for the individual modules.

If the MC control is not specified during linking all MISRA C settings of the linked modules will be lost and the output file will not contain any MISRA C settings. If no modules have MISRA C settings, but the MC control is provided, the output file will specify that it does not have any MISRA C checks effective.

A located out-file does not contain MISRA C settings. the only effect of this control during locating is generation of this report. If no print file is generated (default during linking), no MISRA C report will be generated either.

The MISRA C report uses the page length as specified with the PAGELENGTH control. The pagewidth is adjusted to make room for the longest module name plus a list of MISRA C checks. This means that the pagewidth will most likely exceed 140 characters.

Example:

```
C166 link x.obj y obj PR MC

; create print file

; generate report
```

MODPATH

Control:

From the **Project** menu, select **Project Options...**
Expand the **Linker/Locator** entry and select **Miscellaneous**.
Add the control to the **Additional locator controls in control file (.ilo)** field.

MODPATH(*directory-name* [, *directory-name*]...)

Abbreviation:

MP

Class:

Link/Locate general

Default:

-

Description:

Using this control you can designate one or more *directory-name*s to be used as the first search path for module files (i.e. object files in link stage and linked object files in locate stage). If the searched module file is not found in the first directory specified in MODPATH, it searches in the next directory in the list. If the searched modue file is not found in any of the directories specified in MODPATH, **l166** searches in the actual directory.

It is also possible to use single 'quotes' to use filenames and directories with spaces in them.

See also section 9.8 *Default Object and Library Directories*.

Example:

```
l166 link util.lib x.obj modpath( c:\src\c166 c:\src )

; x.obj is first searched for in the
; specified directories.
```

```
l166 link util.lib x.obj
     modpath('c:\program files\c166\src')

; the specified directory contains a space
```

NAME

Control:

NAME(*module-name*)

Abbreviation:

NA

Class:

Link/Locate general

Default:

The output filename without extension.

Description:

NAME assigns the specified *module-name* to the output module. If NAME is not specified, the output module has the same name as the output filename without extension. The NAME control does not affect the output filename. Only the *module-name* in the output module's name record is changed. The *module-name* is also the default title in the header of the print file. *module-name* can be any unique identifier of up to 40 characters long.

See also the TITLE control.

Example:

```
l166 link x.obj                 ;module name is X
l166 link x.obj na(NewName)     ;module name is NEWNAME
l166 link y.obj to myprog.lno   ;module name is MYPROG
```

OBJECTCONTROLS

Control:

From the **Project** menu, select **Project Options...**
Expand the **Linker/Locator** entry and select **Miscellaneous**.
Add the control to the **Additional locator controls in control file (.ilo)** field.

OBJECTCONTROLS(*object-control*,...)

Abbreviation:

OC

Class:

Link/Locate module scope

Default:

OC(NOCOMMENTS, LINES, LOCALS, PUBLICS, GLOBALS, TYPE, SYMB)

Description:

This control causes the specified *object-controls* to be applied to the object file only. This does not affect the print file. For example if you give the control OC(NOLINES) only the object file contains no line numbers, the print file may still contain line numbers. Abbreviations of the controls may be given. Valid *object-controls* are:

COMMENTS/NOCOMMENTS, LINES/NOLINES,
LOCALS/NOLOCALS, GLOBALS/NOGLOBALS,
PUBLICS [EX]/NOPUBLICS [EX], SYMB/NOSYMB,
TYPE/NOTYPE and PURGE/NOPURGE.

Example:

```
l166 link x.obj y.obj oc(ty, noln) to z.lno
; perform type checking, no lines numbers in
; object file z.lno
```

ORDER

Control:

From the **Project** menu, select **Project Options...**
Expand the **Linker/Locator** entry and select **Locate Order**.
Click in an empty **Objects** column and select **Sections** or **Groups**. Click in the **List of names** column and enter the names for the objects (separated by commas).

ORDER(*order-control*,...)

or

ORDER *order-control*

Abbreviation:

OR

Class:

Locate module scope

Default:

-

Description:

order-control must be specified as:

	Abbreviation
SECTIONS({*section-name* ['*class-name*']},...)	SE
GROUPS({*group-name* [(*section-name*,...)] },...)	GR

ORDER specifies a partial or complete order for sections and groups and the sections within a group or class.

The subcontrol SECTIONS is used to order the list of *section-names*. The *section-name* identifies the specific sections to be ordered. The '*class-name*' may be used to resolve conflicts with duplicate *section-names*. The locator issues a warning when sections of different classes are listed within one order.

To add all sections belonging to a class to the order, an asterisk ('*') can be used instead of the section name. The sections belonging to this class are all added to the list in an order sorted by align type. When an asterisk is supplied without a class name, **l166** issues an error that it cannot find section '*'.

When a complete class is added to an order by using the asterisk notation, the locator does not complain when the sections within that order belong to different classes.

All sections in one order should belong to the same group or they should not belong to any group. All sections within one group must have the same class. This implies that using the asterisk ('*') to order classes cannot be done when the sections in these classes belong to a group because the other sections specified within the same order certainly have a different group.

When an order consists of different classes the behavior of the CLASSES control is affected. One complete order will always be located as a whole. This implies that when one or more classes within the order have a range specified with the CLASSES control, the entire order can only be located within one range. When a CLASSES range is supplied for more than one class within the order, the range for the first class in the order will be effective for the entire order.

See also: CLASSES control.

When adding a complete class to the order by using an asterisk, the sections within that class cannot be ordered with a separate ORDER SECTIONS control.

The subcontrol GROUPS is used to order the listed groups in consecutive pages in the memory space. A list of sections supplied with a group is used to order these sections within the group. When a section does not belong to this group the locator issues an error.

If an order cannot be completed by the locate algorithm the locator issues a warning and ignores the remaining part of the order which caused this warning.

The locator treats the next controls as one order:

```
ORDER( SECTIONS( SECTION1, SECTION2 ) )
ORDER( SECTIONS( SECTION3, SECTION1 ) )
ORDER( GROUPS( GROUP1( SECTION2, SECTION4 ) ) )
```

The resulting order is:

```
SECTION3, SECTION1, SECTION2, SECTION4
```

Using the module scope switch in the ORDER control is allowed at the following syntactical locations:

ORDER({***module-name*** *order-control* },...)

order-control:

SECTIONS({***module-name*** *section-name*
['*class-name*']},...)
GROUPS({***module-name*** *group-name*
(*section-name*,...)},...)

When the scope is set to GENERAL the locator searches all input modules for the *section-name* or *group-name*. When there is more than one match a warning will be issued and the control is applied to the first match.

Using global sections (GLOBAL, COMMON, SYSSTACK or GLBUSRSTACK) in ORDER SECTIONS causes the ORDER control to be a general control for that section.

Using a global group in ORDER GROUP causes the ORDER control to be a general control for that group.

Example:

Locate the `SEC1`, `SEC4` and `SEC3` in this order:

```
order( sections(SEC1, SEC4, SEC3) )
```

Also locate the `SEC1`, `SEC4` and `SEC3` in this order, but take them from class `CLASS1` only::

```
or se(SEC1 'CLASS1', SEC4 'CLASS1', SEC3'CLASS1')
```

The same, but then for sections from different classes. The CLASSES control specifies that `CLASS1` will be located in the range `8400h` to `87ffh`, and `CLASS2` in the range `8000h` to `83ffh`; the locator will locate the entire order of `SEC1`, `SEC4` and `SEC3` is located within the range for `CLASS1` because this is the first class within the order; the NOWARNING control is used to suppress the warning that sections from different classes are ordered:

```
OR SE(SEC1 'CLASS1', SEC4 'CLASS2', SEC3'CLASS2')
CLASSES( 'CLASS2' ( 8000h to 83ffh ),
         'CLASS1' ( 8400h to 87ffh ) )
NOWARNING( 149 )
```

Order the (the sections from the) classes CLS3, CLS1 and CLS2. The CLASSES control specifies that CLS1 will be located in page 4, which implies that the entire order of CLS3, CLS1 and CLS2 is located in page 4:

```
ORDER SECTIONS( * 'CLS3', * 'CLS1', * 'CLS2' )
CLASSES( 'CLS1' ( RANGEP( 4 ) ) )
```

Order classes CLS3 and CLS2 and locate section START_SCT immediately before these classes and section END_SCT immediately after these classes:

```
OR SE(  START_SCT, * 'CLS3', * 'CLS2', END_SCT )
```

Put the groups GROUP1 and GROUP2 in consecutive pages and order SEC1 and SEC2 within GROUP2:

```
OR GR(GROUP1, GROUP2 (SEC1, SEC2) )
```

Order the sections CSECT1 and CSECT3 from module TSK1.LNO and CSECT1 from module TSK2.LNO:

```
ORDER SECTIONS
(
     { TSK1.LNO CSECT3, CSECT1 }
     { TSK2.LNO CSECT1 }
)
```

OVERLAY

Control:

From the **Project** menu, select **Project Options...**
Expand the **Linker/Locator** entry and select **Miscellaneous**.
Add the control to the **Additional locator controls in control file (.ilo)** field.

OVERLAY(*class-name*,... (*addr1* TO *addr2*))

Abbreviation:

OVL

Class:

Locate general

Default:

-

Description:

The OVERLAY control is used for code memory banking. The *class-name*(s) specify the classes to be overlaid on the address range *addr1* TO *addr2*. Each *class-name* is one bank. The locator needs a CLASSES control for all *class-name*s and locates the classes in the specified ranges. However, when labels or symbols, defined in sections belonging to these classes, are used in the code, the values are translated. The value used in the code for such a label or symbol is the address it would have if the class was located in the address range *addr1* TO *addr2* of the OVERLAY control. This translation is done as follows:

value_in_code = symbol_address - symbol_class_base + overlay_base

value_in_code :	result value of symbol when it is used in the code
symbol_address :	address of symbol located in one of the classes in the overlay

symbol_class_base : the base address of the class where the section of the symbol belongs to. The class is one of the overlay classes and the address is set by the CLASSES control for this class.

overlay_base : the base address of the overlay area. This address is set by the OVERLAY control.

The locator does not accept more than one OVERLAY control.

Example:

In this example some hardware is used to switch between three memory banks, BANK1, BANK2 and BANK3. The hardware is steered by a software routine: the bankswitch function. Each bank is one EPROM or a set of EPROMs. The EPROM programmer takes care of extracting memory banks from the hex file and burning each bank in a separate EPROM. This is possible because each bank has its own address range.

Figure 9-1 shows the memory map.

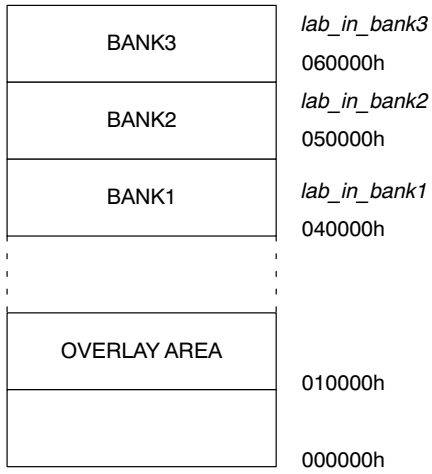

Figure 9-1: Memory map

Each bank is a set of sections all having the same class. In this case the classes are named 'BANK1', 'BANK2' and 'BANK3'. The application is located with the following locator invocation file:

```
MEMSIZE( SEGMENT 7 )

OVERLAY( BANK1, BANK2, BANK3 ( SEGMENT 1 TO SEGMENT 2 - 1 ) )
```

```
RESERVE MEMORY( SEGMENT 1 TO SEGMENT 2 - 1 )

CLASSES
(
      BANK1 ( SEGMENT 4 TO SEGMENT 5 - 1 )
      BANK2 ( SEGMENT 5 TO SEGMENT 6 - 1 )
      BANK3 ( SEGMENT 6 TO SEGMENT 7 - 1 )
)
```

The overlay area is segment 1 (040000h to 04FFFFh). In this example the area is reserved to prevent other sections to be located there, but it is also possible to locate one of the banks in that area. The MEMSIZE control is used to be able to locate the banks (classes) outside the physical memory range of the C166/ST10.

The labels *lab_in_bank1*, *lab_in_bank2* and *lab_in_bank3* are labels defined in sections belonging to the banks BANK1, BANK2 and BANK3 respectively. Let's assume that they are located at the addresses 040100h, 05012Ah and 0603F0h respectively. When the following code is used in a procedure, no matter if it belongs to a bank or not, the result uses the translated addresses of the labels:

Source	**Result**
.	
.	
MOV R4, #SEG *lab_in_bank1*	MOV R4, # 1h
MOV R5, #SOF *lab_in_bank1*	MOV R5, # 100h
call to bankswitch function	
.	
.	
MOV R4, #SEG *lab_in_bank2*	MOV R4, # 1h
MOV R5, #SOF *lab_in_bank2*	MOV R5, # 12Ah
call to bankswitch function	
.	
.	
MOV R4, #SEG *lab_in_bank3*	MOV R4, # 1h
MOV R5, #SOF *lab_in_bank3*	MOV R5, # 3F0h
call to bankswitch function	
.	
.	

As you can see all labels are now addressed in segment 1, which is the overlay area. The *call to bankswitch function* actually switches the memory bank, so the address in registers R4/R5 points to the correct code.

PAGELENGTH

Control:

From the **Project** menu, select **Project Options...**
Expand the **Linker/Locator** entry and select **Map File**.
In the **Locator map file** box, select **Default name** or **Name map file**.
Expand the **Map File Format** entry and enter the number of lines in the **Page length (20–255)** field.

PAGELENGTH(*lines*)

Abbreviation:

PL

Class:

Link/Locate general

Default:

PAGELENGTH(60)

Description:

Sets the maximum number of lines on one page of the print file and MISRA C file. This number does not include the lines used by the page header (4). The valid range for the PAGELENGTH control is 20 - 255.

Example:

```
L166 link x.obj pl(50)   ; set page length to 50
```

PAGEWIDTH

Control:

From the **Project** menu, select **Project Options...**
Expand the **Linker/Locator** entry and select **Map File**.
In the **Locator map file** box, select **Default name** or **Name map file**.
Expand the **Map File Format** entry and enter the number of characters in the **Page width (78-255)** field.

PAGEWIDTH(*characters*)

Abbreviation:

PW

Class:

Link/Locate general

Default:

PAGEWIDTH(132)

Description:

Sets the maximum number of characters on one line in the listing. Lines exceeding this width are wrapped around on the next lines in the listing. The valid range for the PAGEWIDTH control is 78 - 255.

Example:

```
l166 link x.obj pw(80)

; set page width to 80 characters
```

PAGING

Control:

From the **Project** menu, select **Project Options...**
Expand the **Linker/Locator** entry and select **Map File**.
In the **Locator map file** box, select **Default name** or **Name map file**.
Expand the **Map File Format** entry and enable the **Format list file into pages** check box.

PAGING / NOPAGING

Abbreviation:

PA / NOPA

Class:

Link/Locate general

Default:

PAGING

Description:

Turn the generation of formfeeds and page headers in the print file and MISRA C report on or off.

Example:

```
l166 locate task intno=0 x.lno nopa

; turn paging off: no formfeeds and page headers
```

PRINT

Control:

From the **Project** menu, select **Project Options...**
Expand the **Linker/Locator** entry and select **Map File**.
In the **Locator map file** box, select **Default name** or select **Name map file** and enter a name for the locator map file. If you do not want a map file file, select **Skip map file**.

PRINT[(*file*)] / NOPRINT

Abbreviation:

PR / NOPR

Class:

Link/Locate general

Default:

Link stage: NOPRINT
Locate stage: PRINT(*outputfile*.map)

Description:

The PRINT control specifies an alternative name for the print file. The filename may be omitted. If no extension is given, the default extension is used. In the link stage the default filename is a combination of the basename of the linked output object file and the extension `.lnl`. In the locate stage the default filename is the basename of the absolute output file and the extension `.map`. The NOPRINT control causes no print file to be generated. This also affects generation of a MISRA C report.

Example:

```
l166 link x.obj pr
; print file name is x.lnl

l166 link x.obj to out.lno pr
; print file name is out.lnl

l166 link x.obj pr(mylist)
; print file name is mylist.lnl
```

```
l166 locate task intno=0 x.lno
; print file name is a.map

l166 locate task intno=0 x.lno pr(abslist)
; print file name is abslist.map
```

PRINTCONTROLS

Control:

From the **Project** menu, select **Project Options...**
Expand the **Linker/Locator** entry and select **Miscellaneous**.
Add the control to the **Additional locator controls in control file (.ilo)** field.

PRINTCONTROLS(*print-control*,...)

Abbreviation:

PC

Class:

Link/Locate module scope

Default:

PC(NOCOMMENTS, NOLINES, LOCALS, PUBLICS, GLOBALS, NOSYMB)

Description:

This control causes the specified *print-controls* to be applied to the print file only. This does not affect the object file. For example if you give the control PC(NOLINES) only the print file contains no line numbers, the object file may still contain line numbers. Abbreviations of the controls may be given. Valid *print-controls* are:

COMMENTS/NOCOMMENTS, LINES/NOLINES, LOCALS/NOLOCALS, SYMB/NOSYMB, PUBLICS/NOPUBLICS, GLOBALS/NOGLOBALS, and PURGE/NOPURGE.

When you specify a control in both OBJECTCONTROLS and PRINTCONTROLS, it has the same effect as specifying it once outside of these controls.

Example:

```
l166 link x.obj y.obj pc(ty, noln) to z.lno

; perform type checking, no lines numbers in
; print file z.lnl
```

PUBLICS

Control:

From the **Project** menu, select **Project Options...**
Expand the **Linker/Locator** entry and select **Miscellaneous**.
Add the control to the **Additional locator controls in control file (.ilo)** field.

PUBLICS [EXCEPT(*public-symbol*,...)]
NOPUBLICS [EXCEPT(*public-symbol*,...)]

Abbreviation:

PB [EC] / NOPB [EC]

Class:

Link/Locate module scope

Default:

PUBLICS for both OBJECTCONTROLS and PRINTCONTROLS

Description:

PUBLIC keeps the public symbol records in the object file and the corresponding information to be placed in the print file when the DEBUG control is in effect. The EXCEPT subcontrol allows you to modify this control. This subcontrol is only valid at link stage. Public symbol records are used by the **l166** linker to resolve external references. *Public-symbol* can be any valid symbol name that is defined public in one of the input modules.

If a public symbol is used in a relocation expression in the output file, the symbol is not removed from the output file. Instead, the symbol is converted to an external reference. The linker issues a warning because of this unresolved external.

See also OBJECTCONTROLS, PRINTCONTROLS, PURGE/NOPURGE.

Example:

```
l166 link x.obj y.obj pb ec(upub1, upub2)
     to xy.lno
; keep all publics except for the user defined
; public symbols upub1 and upub2

l166 locate task intno=0 xy.lno nopb
; no public symbol records in a.out and a.map
```

PUBLICSONLY

Control:

PUBLICSONLY(*filename*,...)

Abbreviation:

PO

Class:

Link only

Default:

-

Description:

PUBLICSONLY indicates that only the absolute public symbol records of the argument files are used. The other records in the module are ignored. This can be used to resolve external references to C166/ST10 files. *filename* can be the name of a file optionally preceded by a directory path name.

Example:

```
l166 link x.obj y.obj po( x.obj )

; use only publics of x.obj
```

PUBTOGLB

Control:

From the **Project** menu, select **Project Options...**
Expand the **Linker/Locator** entry and select **Miscellaneous**.
Add the control to the **Additional locator controls in control file (.ilo)** field.

PUBTOGLB [(*ptog-specifier*,...)]

or

PUBTOGLB [*ptog-specifier*]

Abbreviation:

PTOG

Class:

Locate module scope

Default:

-

Description:

The *ptog-specifier* is one of:

	Abbrev.
SECTIONS({*sect-name* ['*class-name*']},...)	SE
GROUPS(*group-name*,...)	GR

This control causes all public symbols, sections and groups to be converted to global. This means that the task scope is removed from the input module. This control can be used when the objects from the assembler and public libraries are directly input for the locator.

When some modules are with PTOG and some modules are without PTOG it might be necessary to force some groups or sections to be combined from all modules. This can be done with the sub-controls SECTIONS and GROUPS. The sub-control SECTIONS specifies section *sect-name* with *class-name* to be made global. With the sub-control GROUPS only the groups *group-name* are changed to global. When PTOG is specified without sub-controls it will overrule the PTOG controls with sub-controls.

When PTOG is specified after the GENERAL control or before the first input module it will affect all input modules.

Using the module scope switch in the PUBTOGLB control is allowed at the following syntactical locations:

PUBTOGLB({***module-name*** *ptog-specifier* },...)

SECTIONS({{***module-name*** *sect-name* ['*class-name*'] }},...)

GROUPS({***module-name*** *group-name* },...)

Pitfall when PUBLIC is promoted to GLOBAL

The following example makes the pitfall clear:

module1:
- has a CODE section CODE1 with task procedure PRC1
- has a DATA section DATA1 in group GRP1
- DPP2 is assumed to GRP1
- The code uses EXTERN LAB3:WORD

module2:
- has a CODE section CODE2 with task procedure PRC2
- has a DATA section DATA2 in group GRP1
- DPP2 is assumed to GRP1
- The code uses EXTERN LAB3:WORD

module3:
- defines PUBLIC LAB3 in a DATA section DATA3 in GRP1

Locator invocation:

```
LOCATE
module1
module2
module3 PTOG
INTERRUPT( PRC1(20h) PRC2(21h) )
```

The group GRP1 is now a PUBLIC group in module1 and in module2. It is a GLOBAL group in module3 because of the PTOG control. This means that the three GRP1 groups are different groups. So, it is not guaranteed that the three groups are located in the same page. The assumed DPP2 in module1 and module2 now cannot safely be used to access LAB3 when DPP2 is loaded with the page number of GRP1.

To overcome the problem you have the following options:

- Explicitly load DPP2 with the page number of LAB3 each time this label is accessed. The three groups remain different groups which can reside in different pages.
- Add the PTOG control for all GRP1 to the locator invocation. The three groups are now combined to one group. This whole group cannot be larger than one page. The invocation should be as follows:

```
LOCATE
module1
module2
module3 PTOG
INTERRUPT( PRC1(20h) PRC2(21h) )

GENERAL   ; all following controls
          ; apply to all modules
PTOG( GROUPS( GRP1 ) )
 ; GRP1 from all modules now global
```

An equal example can be given for a PUBLIC section with a GLOBAL label:

module1:
- has a CODE section CODE1 with task procedure PRC1
- has a PUBLIC DATA section DATA1
- DPP2 is assumed to DATA1
- The code uses EXTERN LAB3:WORD

module2:
- has a CODE section CODE2 with task procedure PRC2
- has a PUBLIC DATA section DATA1
- DPP2 is assumed to DATA1
- The code uses EXTERN LAB3:WORD

module3:
- defines PUBLIC LAB3 in a PUBLIC DATA section DATA1

Locator invocation:

```
LOCATE
module1
module2
module3 PTOG
INTERRUPT( PRC1(20h) PRC2(21h) )
```

Also in this example we have to be careful when using LAB3 in module1 and module2. When in these module DPP2 is loaded with the page number of data section DATA1 it is not guaranteed that the three data sections in DATA1 are located within the same page because the PUBLIC sections are not combined to each other and they also will not be combined to the GLOBAL section in module3.

To overcome the problem you have the following options:

- Explicitly load a DPP with the page number of LAB3 each time the label is accessed. The three data sections remain separate sections.
- Add the PTOG control for section DATA1 from all modules to the locator invocation. The three data sections are now combined to one section. This whole section cannot be larger than one page. The locator invocation should be:

```
LOCATE
module1
module2
module3 PTOG
INTERRUPT( PRC1(20h) PRC2(21h) )
GENERAL   ; all following controls
          ; apply to all modules
PTOG( SECTIONS( DATA1 ) )
 ; all DATA1 sections become global
```

Example:

```
l166 LOCATE PTOG hello.obj c166s.lib
l166 LOCATE mod1.lno PTOG mod2.lno
     PTOG( GROUPS(C166_DGROUP) )
```

PURGE

Control:

From the **Project** menu, select **Project Options...**
Expand the **Linker/Locator** entry and select **Miscellaneous**.
Add the control to the **Additional locator controls in control file (.ilo)** field.

PURGE / NOPURGE

Abbreviation:

PU / NOPU

Class:

Link/Locate module scope

Default:

The controls are set as mentioned by their description.

Description:

PURGE is exactly the same as specifying NOLINES, NOLOCALS, NOCOMMENTS, NOPUBLICS, NOSYMB, NOGLOBALS. NOPURGE in the control list is the same as specifying LINES, LOCALS, COMMENTS, PUBLICS, SYMB, GLOBALS. PURGE removes all of the public, global and debug information from the object file and the print file. It produces the most compact code possible. NOPURGE is useful to debuggers. PRINTCONTROLS and OBJECTCONTROLS can be used to modify the scope of PURGE/NOPURGE.

Example:

```
l166 link x.obj y.obj purge

; no public and debug info
```

RENAMESYMBOLS

Control:

From the **Project** menu, select **Project Options...**
Expand the **Linker/Locator** entry and select **Miscellaneous**.
Add the control to the **Additional locator controls in control file (.ilo)** field.

RENAMESYMBOLS(*rename-control*,...)

Abbreviation:

RS

Class:

Link/Locate module scope

Default:

All symbols/groups keep the name they already have.

Description:

RENAMESYMBOLS allows you to change the names of already defined symbols and groups.

At link stage the following *rename-controls* are allowed:

	Abbreviation
EXTERNS({*extrn-symbol* TO *extrn-symbol*}, ...)	EX
PUBLICS({*public-symbol* TO *public-symbol*}, ...)	PB
GROUPS({*groupname* TO *groupname*}, ...)	GR

At link stage the following *rename-controls* are allowed:

	Abbreviation
EXTERNS({*extrn-symbol* TO *extrn-symbol*}, ...)	EX
GLOBALS({*global-symbol* TO *global-symbol*}, ...)	GL
INTNRS({*intnr-symbol* TO *intnr-symbol*}, ...)	IN

EXTERNS allows you to change existing external symbol names. *extrn-symbol* is any valid name for an external symbol.

PUBLICS allows you to change the names of public symbols. *public-symbol* is any valid name for a public symbol. The first *public-symbol* must be an existing public in one of the modules in the input list.

GLOBALS allows you to change the names of existing global symbols. *global-symbol* is any valid name for a global symbol.

GROUPS allows you to change the *groupname* assigned by the assembler or C-compiler. The first *groupname* must be an existent group in one of the modules in the input list.

INTNRS allows you to change interrupt names which were defined in assembler source modules. *intnr-symbol* is any valid name for an interrupt symbol.

Using the module scope switch in the RENAMESYMBOLS control is allowed at the following syntactical locations:

RENAMESYMBOLS({***module-name*** *rename-control* },...)

In the *rename-control*:

type({{***module-name*** *name* TO *name* }},...)

When the module scope is set to GENERAL the locator searches for *name* in all input modules and the control is applied to all matches.

You can use the RENAMESYMBOLS control to override predefined symbol. Specify the predefined symbol as the destination name. The locator notices that this predefined symbol already has a value and will not overwrite it but issues warning 517: 'using existing definition of *symbol*'. This can be used to override DPP assignments, specify a different user stack, etc.

Predefined symbols cannot be renamed, because they do not exist at the time the invocation is parsed by the locator. To rename predefined symbol, use EQU in the assembly source to equate the predefined symbol to another symbol.

There is a limitation of 100 to the total number of RENAMESYMBOLS.

Examples:

```
l166 link x.obj rs( gr(agroup to newgroup) )


l166 locate task intno=0 x.lno
          rs( gl(aglobal to newglobal) )

l166 locate x.obj ext/rt166s.lib
          rs(gl(_my_stack_top to?USRSTACK_TOP))
```

RESERVE

Control:

From the **Project** menu, select **Project Options...**
Expand the **Linker/Locator** entry, expand the **Memory** entry and select **Reserved Memory** and specify one or more memory ranges, or select **Reserved Dedicated Areas** and select one or more items.
Expand the **Interrupt Vector Table** entry and specify interrupt numbers in the **Reserve interrupt vector(s)** field.
Expand the **Stack and Heap** entry and select a **System stack size**.

RESERVE(*reserve-control*,...)

or

RESERVE *reserve-control*

Abbreviation:

RE

Class:

Locate general

Default:

All of memory is assumed available

Description:

Specify *reserve-control* with one or more of the following subcontrols:

Subcontrol	Abbreviation
MEMORY ({*address1* TO *address2* [RAM]},...)	ME
PECPTR ({*pecptr1* [TO *pecptr2*]},...)	PP
INTTBL ({*intno1* [TO *intno2*]},...)	IT
SYSSTACK (*ssk_no*)	SY

RESERVE tells **l166** to prevent locating sections in certain areas of memory. If however, for example due to absolute section, sections are located in such a reserved memory area, **l166** reports a warning but still places the section in this area. The first value given in the command must be less than or equal to the second value.

MEMORY reserves address ranges.

address1, *address2*	any valid 18-bit or 24-bit memory address that lies within the processors memory space. The RAM keyword can be added to indicate that this reserved space contains readable and perhaps writable memory for simulator purposes.

PECPTR prevents the location of PEC-pointer or PEC-pointer ranges.

pecptr1, *pecptr2*	can be one of the PEC pointer names: PECC0 to PECC15.

INTTBL reserves positions in the interrupt table

intno1, *intno2*	is a value of 0 to 127.

SYSSTACK reserves a specified stack range

ssk_no	0, 1, 2, 3, 4 or 7. If 7 is used, the sections must have the combine type SYSSTACK.

The RESERVE control overrules the assembler directive SSKDEF.

See the SSKDEF directive for an explanation of the ssk numbers.

Examples:

```
reserve( memory(100 to 200, 400H to 500H) )
re me( page(2) to page(3) - 1 )  ;reserve one page
re pp( PECC3 TO PECC5, PECC7 )
re it( 3 to 10, 12, 20 to 22 ) re sy( 2 )
re(memory(0xE000 - 0xEFFF RAM))  ;reserve IO-RAM area
```

RESOLVEDPP

Control:

From the **Project** menu, select **Project Options...**
Expand the **Linker/Locator** entry and select **Miscellaneous**.
Add the control to the **Additional locator controls in control file (.ilo)** field.

RESOLVEDPP / NORESOLVEDPP

Abbreviation:

RD / NORD

Class:

Locate general

Default:

NORESOLVEDPP

Description:

When a module uses an external address symbol from a located file, the absolute symbol value is a full 24-bit pointer. To translate these 24-bit pointers to 16-bit DPP referenced addresses, the RESOLVEDPP control can be supplied to the locator. Set the DPP addresses using the SETNOSGDPP control.

The assembler and compiler must reserve this 16 bit space instead of a regular 24 bit space; the object file size cannot be reduced in the locator stage.

The RESOLVEDPP control is only needed when the 2 modules are located in seperate stages. When located at the same time, the locator is able to keep track of the correct pages and will work properly without the flag. Please note that usage of the RESOLVEDPP control can result in faulty code. See the example below.

Module A declares:

symbol A at 05'E012h
symbol B at 08'0113h
symbol C at 00'0201h
DPP0 at 05'C000h (page 23)
DPP1 at 08'0000h (page 32)

Module B uses symbols A, B and C from module A and declares:

DPP0 at 05'C000h (page 23)
DPP1 at 08'7000h (page 33)

Without the RESOLVEDPP control, the symbols are used as 24 bit pointers, or the locator issues an error that the symbol value does not fit in the assigned space (as could be the case for externally referenced near variables).

With the RESOLVEDPP control, the locator will try to fit symbols A,B and C in one of the pages referenced by the DPP registers. Symbol A will fit nicely in DPP0 and will be stored as DPP0:2012h. Symbol B will not fit in DPP0 and DPP1 so the locator might issue an error after all for it, or use the 24 bit pointer. Symbol C however, does not fit in DPP0 or DPP1, but the value does fit in a 16 bit position. Hence the locator does not see a problem and will patch the symbol value 00201h in the reserved space. However, 00201h is also a valid DPP0 address: DPP0:0201h and with DPP0 pointing at page 23, this address reference will go wrong at run-time.

To avoid this situation, do not use the RESOLVEDPP control in cases where a 24 bit address lies in segment 00. In all other segments, the 24 bit address will not fit in a 16 bit space and the locator will proceed as usual.

Examples:

```
1166 loc a.obj RESOLVEDPP

  ; Resolve DPP addresses for symbols
```

SECSIZE

Control:

From the **Project** menu, select **Project Options...**
Expand the **Linker/Locator** entry and select **Section Size Adjust**.
Click in the **Section name** column and enter the name of a section, in the **Type** column select **=**, **+** or **–** , and enter a size in the **Value** column.

SECSIZE(*size-control*,...)

Abbreviation:

SS

Class:

Link / Locate module scope

Default:

-

Description:

Specify *size-control* as:

section-name ['*class-name*'] ([+|-] *size*)

SECSIZE allows you to specify the memory space used by a section. The *size* is an 24-bit number that is used to change the *size* of the specified section. There are three ways to specify this value:

+	number will be added to current section length
-	number will be subtracted from the current section length
No sign	indicates that the number should become the new section length.

The locator will act as if an ORG directive was used at the end of the relocatable section in assembly. For example if the section STACKSECT is decreased as follows:

```
SECSIZE( STACKSECT( -20h ) )
```

the same effect was obtained if the next line was included at the end of the section STACKSECT:

```
ORG  $ - 20h
```

Another example:

```
SECSIZE( STACKSECT( 1024 ) )
```

like:

```
ORG  1024
```

where STACKSECT is a relocatable section.

Using the module scope switch in the SECSIZE control is allowed at the following syntactical locations:

SECSIZE({***module-name*** *size-control* },...)

When the module scope is general the SECSIZE control is applied to all sections with *section-name* and *class-name*.

When the SECSIZE control is specified after the GENERAL control, all input modules are searched for the named sections. When multiple sections occur with the same name, only the first occurrence is resized. When all occurrences should be resized, the section name should be specified for each module (using the module scope switch) for all these sections. For example:

```
GENERAL
SECSIZE( { module1.obj SOMESECT ( 200h ) }
         { module2.obj SOMESECT ( 200h ) } )
```

Examples:

```
secsize( Sec1 (1000))
ss( Sec1 'Class1' (0F00H)) ss( Sec1 (+100))
```

SET

Control:

From the **Project** menu, select **Project Options...**
Expand the **Linker/Locator** entry and select **Miscellaneous**.
Add the control to the **Additional locator controls in control file (.ilo)** field.

SET(*system settings*)

Abbreviation:

-

Class:

Link/Locate general

Default:

SET(GROUPS=250, CLASSES=250)

Description:

The SET control allows manipulation of the internal tables used for section cross referencing and class or group ordering. The upper limit of the number of sections, groups or classes is at this moment restricted to 65533. Reducing the default limits can increase the linker/locator processing speed and will reduce memory usage. Use the SUMMARY control to get a definite count of sections found by the linker/locator.

Example:

```
l166 loc @_fewgroups.loc "SET(GROUPS=12)"
;allow for only 12 groups to save memory
```

SETNOSGDPP

Control:

From the **Project** menu, select **Project Options...**
Expand the **Linker/Locator** entry and select **Miscellaneous**.
Add the control to the **Additional locator controls in control file (.ilo)** field.

SETNOSGDPP(*dpp-name*(*value*), ...)

Abbreviation:

SND

Class:

Locate general

Default:

ADDRESSES LINEAR(0) if SETNOSGDPP is not used.
If SETNOSGDPP is used the not assigned DPPs are assigned as follows:
DPP0(0), DPP1(1), DPP2(2), DPP3(3)

Description:

dpp-name is one of: DPP0, DPP1, DPP2, DPP3.

value is a page number which is expected to be present in the related DPP register. The value ranges from 0 to the last available page number, and must be 3 for DPP3. If the SND control is used, the locate algorithm changes for LDAT sections. The approach of LDAT sections is no longer linear but paged. The LDAT sections cannot be located outside one of the indicated pages. Relative LDAT sections are located within these pages. *Value* may be a valid expression or a single public/global symbol.

If the ADDRESSES LINEAR control is used it is not possible to use the SETNOSGDPP control. The predefined symbols ?BASE_DPP0, ?BASE_DPP1, ?BASE_DPP2 and ?BASE_DPP3 are directly related to the page numbers assigned by the SETNOSGDPP control. The symbols contain the base address of the assigned page.

Example:

```
setnosgdpp( dpp0(5), dpp1(6), dpp2(9), dpp3(3) )
snd (dpp0( PAG(0A4000h)), dpp1(_DppVar))
; assign page 41 to DPP0 and the value public
; symbol _DppVar to DPP1
```

SMARTLINK

Control:

From the **Project** menu, select **Project Options...**
Expand the **Linker/Locator** entry and select **Smart Linking**.
Enable the **Remove unused sections / Enable Smart Linking** check box. Optionally, add a **Smart Linking specification**: click in an empty **Object** column and select **Section**, **Group**, **Class** or **File**. Click in the **Name** column and enter a name for the object. In the **Action** column, select **Remove** to remove unused sections, otherwise select **Keep**.

SMARTLINK [([*smartlink-spec* | EXCEPT(*smartlink-spec*)] [[,] ...])]

Abbreviation:

SL

Class:

Link/Locate general

Default:

-

Description:

The SMARTLINK control enables the linker/locator to check for unused sections in the output file and removes them if specified in the *smartlink-spec* field. Valid values for *smartlink-spec* are:

SECTIONS(*sect-name*)
GROUPS(*group-name*)
CLASSES(*class-name*)
FILE(*file-name*)

The abbreviations are respectively: SE, GR, CL, FI.

The linker/locator establishes a list of entry points for the program code and data. This list is established as follows:

- sections containing task (interrupt) routines
- sections called ?C166_NHEAP, ?C166_FHEAP, C166_BSS, C166_INIT, C166_US, C166_US0, C166_US1 and C166_INT
- userstack, global userstack and system stack sections

- absolute sections

Sections in this list are never removed. Any section referred to by a relocatable symbol inside these sections, is added to the list of entry points. All sections are checked this way. Sections which are not listed in the entry point list are assumed to be unused and will be removed if specified in the *smartlink-spec* field.

When a section is removed, all address ranges, relocation records, symbols and other associated information is also removed. If the last section of a class or group is removed, the class or group itself is removed as well.

Only sections specified in the SMARTLINK control will be removed. If no sections are specified, the linker/locator assumes that any section in the output file can be removed.

Sections specified in the EXCEPT clause will not be removed. Sections you specify in the EXCEPT clause, are not added to the entry point list; the EXCEPT clause only prevents sections from being removed if they are not listed in the entry point list.

Use the SMARTLINK control preferably in the global scope locator phase. In this phase it is easier to determine which sections are unused and therefore can be removed. You can use the control during the link stage, but you must ensure that sections needed by external modules -which are not included at that point- are not removed. You can use the EXCEPT clause for that.

Sections specified in controls other than the SMARTLINK control, will not be removed even if they are explicitly selected for removal. Controls in which sections can be specified are the ADDRESSES control (which makes a section absolute, so an entry point) and the ORDER, SECSIZE and PUBTOGLB controls. Please note that this does not work for classes or groups. If the last section of a class or group is removed, the class or group itself is removed as well, even if specified explicitly in a CLASSES or ORDER control.

Because the linker/locator removes the sections from the output file, it will first extract modules from the libraries if needed. If sections that require these library modules are removed, the extracted sections are removed as well.

Some library modules use sections that comply with the specification for initial entry point as mentioned above. This is specifically the case for sections like C166_BSS and C166_INIT. These sections will be extracted from the library and included in the output file, although their content is unused. In general, global and static variables from the library will not be removed if the module specifying them was extracted at some point.

Take care when you use the ORDER control and calculate the location of a subsequent section based on the location and size of an earlier section. Because the subsequent section may not be referred to directly using a relocatable symbol, it could be removed so the runtime calculation of the start address of that subsequent section will fail. This is a complicated and error-prone way of programming and is strongly discouraged.

Examples:

```
SMARTLINK
; Remove any and all unused sections

SMARTLINK(FILE(module.obj))
; Remove only unused sections belonging to module
; "module.obj"

SL(FI(module.obj) EXCEPT(SE(sect1)))
; Remove all unused sections of module
; "module.obj" except section "sect1"

SL(FI(a.lno) EC(CL(class1), SE(sect1)))
; Remove all unused sections from module "a.lno" except
; sections belonging to class "class1" or sections
; called "sect1".
```

The *smartlink-spec* provides levels of control. If you specify a section for removal using a less general group specification, this will override an except clause specification for a more general group. For example, when you specify a section for removal using GROUPS(), this overrides an (earlier or later) specification using EXCEPT(CLASSES()). This works vice versa as well: excepting a section from a group, class or file that should be removed as a whole.

```
SL(FI(a.lno) EC(CL(class1)) EC(GR(group1)) SE(sect1))
; Remove all sections from module "a.lno", except those
; in class "class1" or group "group1", unless it is
; section "sect1". The SE() specification overrides the
; GR() and CL() EXCEPT clauses.
```

```
SL(EC(FI(a.lno)), CL(class1))
; Remove all sections of class "class1". Because this is
; less general then the EXCEPT clause, the latter has no
; effect (all sections of "class1" even in module
; "a.lno" will be removed)
```

STRICTTASK

Control:

STRICTTASK / NOSTRICTTASK

Abbreviation:

ST / NOST

Class:

Link/Locate general

Default:

NOSTRICTTASK

Description:

When STRICTTASK is set the linker/locator performs a strict checking of the Task Concept. When this control is set the operation of all Task Concept related actions of the linker/locator are compatible with the versions older than 4.0.

The linker introduces the following checks and restrictions when STRICTTASK is set:

- only one Task procedure in the input is accepted, only one Task procedure can be emitted in the output.
- all register bank definitions in the input are combined to one register bank. Only one register bank definition can be emitted in the output. Register definitions with different names cause a warning.

See also the REGDEF/REGBANK/COMREG directives of the assembler.

The locator introduces the following checks and restrictions when STRICTTASK is set:

- only one Task procedure per input module is allowed
- only one register definition per input module is allowed, register definitions with equal names are not combined
- the ADDRESSES RBANK does not allow using register bank names

Examples:

```
l166 link x.obj st  ; perform strict checking
                    ; of the Task Concept
```

SUMMARY

Control:

From the **Project** menu, select **Project Options...**
Expand the **Linker/Locator** entry and select **Map File**.
In the **Locator map file** box, select **Default name** or **Name map file**.
Expand the **Map File Format** entry and enable the **Generate summary** check box.

SUMMARY / NOSUMMARY

Abbreviation:

SUM / NOSUM

Class:

Link/Locate general

Default:

NOSUMMARY

Description:

Print a summary in the print file. The summary consists of an alphabetically ordered section list, grouped by class and group name. For each section, the start address, size and memory class is printed. For each group or class, a total size is printed.

Below this some general information is printed. This includes the total number of symbols, sections, groups, classes and modules, total section size (actually used memory), used RAM and ROM, and total memory size, if possible broken down into RAM and ROM size, system stack, user stack and heap sizes and total time spent linking or locating.

Examples:

```
1166 loc @_x.ilo sum   ; print summary in print file
```

SYMB

Control:

From the **Project** menu, select **Project Options...**
Expand the **Linker/Locator** entry and select **Miscellaneous**.
Add the control to the **Additional locator controls in control file (.ilo)** field.

SYMB / NOSYMB

Abbreviation:

SM / NOSM

Class:

Link/Locate module scope

Default:

SYMB	for OBJECTCONTROLS
NOSYMB	for PRINTCONTROLS

Description:

SYMB specifies **l166** to allow high level language symbols defined by the ?SYMB directive of the assembler to be present in the output file when the DEBUG control is in effect. The symbols are used by a high level language debugger. This debug information is not needed to produce executable code. NOSYMB removes ?SYMB symbols from the output file.

Example:

```
l166 link x.obj nosymb   ;do not keep ?SYMB symbols
```

SYMBOLS

Control:

SYMBOLS / NOSYMBOLS

Abbreviation:

SB / NOSB

Class:

Link/Locate module scope

Default:

SYMBOLS

Description:

This control is only implemented for compatibility with the Infineon linker/locator.

See the LOCALS/NOLOCALS control.

SYMBOLCOLUMNS

Control:

From the **Project** menu, select **Project Options...**
Expand the **Linker/Locator** entry and select **Map File**.
In the **Locator map file** box, select **Default name** or **Name map file**.
Expand the **Map File Format** entry. Enable the **Generate symbol table** check box and enter the number of symbol columns in the **Number of symbol columns (1–4)** field.

SYMBOLCOLUMNS(*number*)

Abbreviation:

SC

Class:

Link/Locate general

Default:

SYMBOLCOLUMNS(2)

Description:

This control specifies the number of columns to be used when producing the symbol table for the object module. *number* can be 1, 2, 3 or 4. 2 columns fit on a 80- character line. When a *number* of columns is specified that does not fit on the page, the linker/locator issues a warning and reduces the *number*.

Example:

```
l166 link x.obj sc(1)   ; specify 1 symbol column
```

TASK

Control:

TASK [(*task-name*)] [INTNO {[*int.-name*][=*int.no*]}]
object-file [*task-control-list*]

Abbreviation:

-

Class:

Locate module scope

Default:

-

Description:

TASK represents all information that is required by the locate stage to combine and locate each task. The *object-file* designates an object module that contains the code representing one single task. When more than one task procedure is found in the *object-file*, the locator issues an error because it does not know which task procedure is referred to. Please use the INTERRUPT control for object files with more than one task.

The *task-name* is an identifier that designates a task. If a *task-name* is already specified in the assembler source, this *task-name* is overwritten. The locator reports a warning. So the *task-name* specified at locate stage governs.

task-control-list is a subset of the task controls specified in this section and the link/locate section.

int.-name is a symbolic name that designates an interrupt number. Interrupt names are usually defined in the assembler source code with the PROC directive. A specification of an interrupt name in the *invocation-line* is only required for completeness.

int.-no represents the interrupt number of the specified interrupt procedure. The value is an absolute number in the range 0 - 127.

TITLE

Control:

From the **Project** menu, select **Project Options...**
Expand the **Linker/Locator** entry and select **Map File**.
In the **Locator map file** box, select **Default name** or **Name map file**.
Expand the **Map File Format** entry and enter a title in the **Title in page header** field.

TITLE(*'title'*)

Abbreviation:

TT

Class:

Link/Locate general

Default:

TITLE(*module-name*)

Description:

Sets the title which is used at the second line in the page headings of the listing. The title string is truncated to 60 characters. If the page width is too small for the title to fit in the header, it will be truncated even further. The default title is the *module-name* of the output module.

Examples:

```
l166 link x.obj y.obj to xy.lno
; title is XY

l166 link x.obj y.obj tt('MYOBJ')
; title is MYOBJ, module-name is X
```

TO

Control:

TO *name*

Abbreviation:

-

Class:

Link/Locate general

Default:

Link stage: First object filename with `.lno` extension

Locate stage: a.out

Description:

This control specifies the output filename. At link stage the output is a linked object file. A filename specified without an extension is extended with `.lno`. At locate stage the output is an absolute object file (default `a.out`).

It is also possible to use single 'quotes' to use filenames and directories with spaces in them.

Examples:

```
l166 link x.obj y.obj           ;output file is x.lno
l166 link x.obj y.obj to 'x y' ;output file is "x y.lno"
l166 link x.obj y.obj to myobj.rel
; output file is myobj.rel

l166 locate task intno=0 xy.lno
; output file is a.out

l166 locate task intno=0 xy.lno to xy
; output file is xy.out

l166 locate task intno=0 xy.lno to abs.tst
; output file is abs.tst
```

TYPE

Control:

From the **Project** menu, select **Project Options...**
Expand the **Linker/Locator** entry and select **Miscellaneous**.
Add the control to the **Additional locator controls in control file (.ilo)** field.

TYPE / NOTYPE

Abbreviation:

TY / NOTY

Class:

Link/Locate general

Default:

TYPE

Description:

TYPE specifies **l166** to perform type checking when linking external and public symbols and when locating global externals and public symbols. The type information remains in the object file, unless PURGE or OBJECTCONTROLS is used. NOTYPE performs no type checking.

Example:

```
l166 locate task intno=0 x.lno noty

; no type checking
```

VECINIT

Control:

From the **Project** menu, select **Project Options...**
Expand the **Linker/Locator** entry and select **Interrupt Vector Table**.
Enable the **Generate vector table** check box. Select **Initialize unused vectors to label or address** and enter a label or address.

VECINIT [(*proc-name*|*address*)] / NOVECINIT

Abbreviation:

VI / NOVI

Class:

Locate general

Default:

VECINIT

Description:

VECINIT initializes all non used interrupt vector locations with a JMPS to itself. The VECTAB control must be on to generate a vector table. NOVECINIT does not initialize the non used interrupt vector locations.

If the default address is specified, the locator will emit JMPS to that address instead of looping jumps to itself. Instead of an address, a task name (or global procedure) can be used. The locator will then emit JMPS to that task or procedure.

Example:

```
l166 locate task x.lno novt

;no interrupt vector table

l166 locate task x.lno task y.lno vecinit(00h)

;generates a vector table that points to the reset
;vector by default. When an unhandled interrupt is
;generated, the processor automatically does a
;soft-reset.
```

VECSCALE

Control:

From the **Project** menu, select **Project Options...**
Expand the **Application** entry and select **Processor**.
From the **Processor** box, select a processor or select **User Defined**.
If you selected **User Defined**, expand the **Processor** entry and select **User Defined Processor**. Select **XC16x/Super10** in the **Instruction set** box
Expand the **Linker/Locator** entry and select **Interrupt Vector Table**.
Enable the **Generate vector table** check box.

VECSCALE(*scaling*)

Abbreviation:

VS

Class:

Locate general

Default:

-

Description:

The XC16x/Super10 architecture allows scaling of the vector table. The normal 4-byte-per-vector size corresponds to scaling 0.

With the VECSCALE control, a global scaling is enforced for the vector table. The locator will use the specified scaling, regardless of scaling modifiers specified by the compiler or assembler. If an inline vector does not fit inside this scale, an error is generated.

If the NOVECTAB control is specified, this control has no effect.

Example:

```
l166 loc task x.lno vs(3)

; use scaling 3 for the vector table
```

VECTAB

Control:

From the **Project** menu, select **Project Options...**
Expand the **Linker/Locator** entry and select **Interrupt Vector Table**.
Enable the **Generate vector table** check box and enter an address in the **Vector table base address** field.

VECTAB[(*base_address*[,*last-vector-number*])] / NOVECTAB

Abbreviation:

VT / NOVT

Class:

Locate general

Default:

VECTAB(0,127)

Description:

VECTAB specifies to automatically generate an interrupt vector table. When the VECTAB control is active, any single task must have a unique interrupt number. NOVECTAB does not generate an interrupt vector table.

The *base_address* indicates the address the vector table is located at.

The optional *last-vector-number* specifies the size of the vector table in whole vectors. The first vector is the reset vector and has number 0. Some architectures allow more than the default number of vectors. Up to vector number 255 can be specified here, reserving space for 256 vectors. Resizing through this control takes the largest vector scale factor into account automatically.

Examples:

```
l166 locate task x.lno novt
; no interrupt vector table

l166 locate VECTAB(0,0)
; only reserve space for the reset vector (0)

l166 locate VECTAB(0,255) VECSCALE(3)
; reserve 8192 bytes of vector table

l166 locate VECTAB(0,255) VECSCALE(0)
; reserve 1024 bytes of vector table

l166 locate VECTAB(SEGMENT(1),10)
; reserve the first 10 vectors only in vector table in
; segment 1
```

WARNING

Control:

From the **Project** menu, select **Project Options...**
Expand the **Linker/Locator** entry and select **Diagnostics**.
Enable one of the options **Display all warnings**, **Suppress all warnings**, and optionally enter the numbers, separated by commas, of the warnings you want to suppress or enable.

WARNING[({*warn-num* [EXPECT(*exp-num*)]},...)]

NOWARNING[({*warn-num* [EXPECT(*exp-num*)]},...)]

Abbreviation:

WA(EXP()) / NOWA(EXP())

Class:

Link/Locate general

Default:

WARNING. All warning messages are enabled.

Description:

You can use these controls to enable or disable warnings. With the WARNING control you can enable warning message number *warn-num* or enable all warnings if no argument is given. With the NOWARNING control you can disable warning message with number *warn-num* or disable all warnings if no argument is given. You can specify multiple numbers. All warning messages of **1166** are enabled by default. EXPECT indicates the number of times the warning should be expected. If the number of times the warning occurred mismatches this number, you are warned about that. The *warn-num* must be an existing warning number. The *exp-num* must be in the range 1 - 31.

When a warning should be suppressed which is issued due to a control in the invocation, it is recommended to place the NOWARNING control before the control causing the warning. Although for most of the warnings the place of the NOWARNING control is irrelevant.

Examples:

```
l166 link x.obj nowa(118 exp(2) )
; disable warning 118 (unresolved externals).
; If the warning occurred more or less than 2
; times l166 issues a warning about this mismatch.

l166 locate task x.lno nowa
; disable all warnings
```

WARNINGASERROR

Control:

From the **Project** menu, select **Project Options...**
Expand the **Linker/Locator** entry and select **Diagnostics**.
Enable the **Exit with error status even if only warnings were generated** check box.

WARNINGASERROR

NOWARNINGASERROR

Abbreviation:

WAE / NOWAE

Class:

Link/Locate general

Default:

NOWARNINGASERROR

Description:

By default, the linker/locator will exit with an exit status of 0, when only warnings were generated. This allows utilities like **mk166** to continue the build process.

With the WAE control, the exit status will be non-zero, which causes **mk166** to stop the build process (unless instructed to continue anyway). The exit status is 4 if only warnings were generated.

Examples:

```
l166 link x.obj wae

; exit with error state if only warnings
```

CHAPTER 10

UTILITIES

TASKING

CHAPTER 10

10.1 OVERVIEW

The following utilities are supplied with the Cross-Assembler for the C166/ST10 which can be useful at various stages during program development.

ar166 A librarian facility, which can be used to create and maintain object libraries.

cc166 A control program for the C166/ST10 toolchain.

d166 A disassembler utility to read the contents of an `a.out` file.

dmp166 A utility to report the contents of an object file.

gso166 A global storage optimizer which optimizes the allocation of objects in memory spaces.

ieee166 A program which formats an absolute (located) TASKING `a.out` file to the IEEE695 format which has full high level language debugging support. The IEEE695 format is used by CrossView Pro.

ihex166 A facility to translate an absolute (located) TASKING `a.out` file into Intel Hex Format for (E)PROM programmers. No symbol information.

mk166 A utility program to maintain, update, and reconstruct groups of programs.

srec166 A facility to translate an absolute (located) TASKING `a.out` file into Motorola S Format for (E)PROM programmers. No symbol information.

When you use a **UNIX** shell (Bourne shell, C-shell), arguments containing special characters (such as '( )' and '?') must be enclosed with **" "** or escaped. The **-?** option (in the C-shell) becomes: **"-?"** or **-\?**.

The utilities are explained on the following pages.

10.2 AR166

Name

ar166 archive and library maintainer

Synopsis

ar166 **d** | **p** | **q** | **s** | **t** | **x** [**vl**] *archive files...*
ar166 **r** | **m** [**a** | **b** | **i** *posname*][**cvl**] *archive files...*
ar166 **-Q** *file*
ar166 **-V**
ar166 **-?** (UNIX C-shell: **"-?"** or **-\?**)

Description

ar166 maintains groups of files (modules) combined into a single archive file. Its main use is to create and update library files as used by the assembler/linker. It can be used, though, for any similar purpose.

The **ar166** archiver uses a full ASCII module header. This makes archives portable and allows them to be edited. The header only contains name and size information.

A file produced by **ar166** starts with the line

```
!<ar>!
```

followed by the constituent files, each preceded by a file header, for example:

```
!<ar:filename 8439>!
```

Note that **ar166** has an option that searches for headers instead of using the size.

archive is the archive file. If '**-**' is used as archive file name, then the original archive is read from standard input and the resulting archive file is written to standard output. This makes it possible to use **ar166** as a filter.

files are constituent modules in the archive file. For PC, the usage of wildcards (?,*) is allowed.

posname is required for the positioning options **a b i** and specifies the position in the archive where modules are inserted.

Options

–? Display an explanation of options at stdout.

–Q *file* Use this option for very long command lines. The *file* is used as an argument string. Each line in the file is treated as a separate argument for **ar166**.

–V Display version information at stderr.

a Append new modules after *posname*.

b Insert new modules before *posname*.

c Normally **ar166** creates *archive* when it needs to. The create option suppresses the warning message that is produced when *archive* is created. The **c** option can only be used with the **r** command and '**–**' as *archive* file name to suppress reading from standard input.

d Delete the named modules from the archive file.

i Identical to option **b**.

l Local. This option causes **ar166** to place the temporary files in the current directory for Windows; in the directory `/tmp` for UNIX.

m Move the named modules to the end of the archive, or to another position as specified by one of the positioning options.

p Print the contents of the named modules in the archive on standard output.

q Quickly append the named modules to the end of the archive file. Positioning options are invalid. The command does not check whether the added members are already in the archive. Useful only to avoid very long waiting times when creating a large archive piece-by-piece.

r Replace the named modules in the archive file. If no names are given, only those modules are replaced for which a file with the same name is found in the current directory. New modules are placed at the end unless another position is specified by one of the positioning options.

s Scan for the end of a module; do not use the size in the module header. The end of a module is found if end-of-file is detected or if a new module header is reached. Note that this may give false results if the modules happen to contain lines resembling module headers. Normally this letter is used as an option, but if no command character is present it behaves as a command: the archive is rewritten with correct module sizes.

t Print a table of contents of the archive file on standard output. If no names are given, all modules in the archive are printed. If names are given, only those modules are tabled.

v Verbose. Under the verbose option, **ar166** gives a module-by-module description of the making of a new archive file from the old archive and the constituent modules. When used with **t**, it gives not only the names but also the sizes of modules. When used with **p**, it precedes each module with a name.

x Extract the named modules. If no names are given, all modules in the *archive* are extracted. In neither case does **x** alter the archive file.

If the same module is mentioned twice in an argument list, it may be put in the archive twice.

Example

```
ar166  rc archive.lib *.obj ..\object1.obj

            ; adds all .obj files in this directory and the
            ; object1.obj file of the parent directory to
            ; an archive called archive.lib.

ar166  t  archive.lib

            ; prints a list of all modules present in the
            ; library on standard output

ar166  p  archive.lib object1.obj > object2.obj

            ; extracts module object1.obj  from the library
            ; archive.lib. The contents of object1.obj is redirected
            ; to a file called object2.obj
```

```
ar166  a  archive.lib object2.obj

          ; appends object file object2.obj to
          ; the end of archive archive.lib
```

10.3 CC166

Name

cc166 control program for the C166/ST10 toolchain

Synopsis

cc166 [[*option*]... [*control*]... [*file*]...]...
cc166 -V
cc166 -? (UNIX C-shell: **"-?"** or **-\?**)

Description

The control program **cc166** is provided to facilitate the invocation of the various components of the C166/ST10 toolchain. The control program accepts source files, options and controls on the command line in random order.

Options are preceded by a '-' (minus sign). Controls are reserved words. The input *file* can have any extension as explained below.

The control program recognizes the following argument types:

- Arguments starting with a '-' character are options. Some options are interpreted by **cc166** itself; the remaining options are passed to those programs in the toolchain that accept the option.
- Arguments which are known by **cc166** as a control are passed to those programs in the toolchain that accept the control.
- Arguments with a `.cc`, `.cxx` or `.cpp` suffix are interpreted as C++ source programs and are passed to the C++ compiler.
- Arguments with a `.ccm` suffix are interpreted as C++ source programs using intrinsics and are passed to the C++ compiler.
- Arguments with a `.c` or `.ic` suffix are interpreted as C source programs and are passed to the compiler.
- Arguments with a `.icm` or `.cmp` suffix are interpreted as C source programs using intrinsics and are passed to the C compiler.
- Arguments with a `.asm` suffix are interpreted as assembly source files are passed to the macro preprocessor.
- Arguments with a `.src` suffix are interpreted as preprocessed assembly files. They are directly passed to the assembler.

- Arguments with a `.lib` suffix are interpreted as library files and passed to the link stage of **l166**. (When the **–cf** option is specified, the link stage is skipped and the libraries are passed to the locate stage.)
- Arguments with a `.ili` suffix are interpreted as linker invocation files and are passed to the link stage of **l166** with a leading '@' sign.
- Arguments with a `.ilo` suffix are interpreted as locator invocation files and are passed to the locate stage of **l166** with a leading '@' sign.
- Arguments with a `.obj` suffix are interpreted as object files and passed to the linker/locator.
- Everything else will cause an error message.

The table below summarizes how the control program interprets file extensions:

Suffix	File type	Passed to tools
.cc/.cxx/ .cpp	C++ file	cp166 – c166 – a166 – l166 – munch166 – l166
.ccm	C++ file	cp166 – c166 – m166 – a166 – l166 – munch166 – l166
.ic	C file	c166 – a166 – l166 – munch166 – l166
.icm	C file	c166 – m166 – a166 – l166 – munch166 – l166
.c	C file	c166 – a166 – l166
.cmp	C file	c166 – m166 – a166 – l166
.asm	Assembly	m166 – a166 – l166
.src	Assembly	a166 – l166
.obj	Object file	l166
.lno	Linker output	l166 (locate phase)
.lib	Library file	l166
.ili	Command file	l166 (linking)
.ilo	Command file	l166 (locating)
.out	Linker/Locator output	srec166 or ieee166 or ihex166 depending on option –srec, –ieee or –hex respectively.

Table 10-1: Flow of file types through the toolchain

Figure 2-1, *C166/ST10 development flow* in Chapter *Overview* of the *Cross-Compiler Users's Manual*.

Normally, **cc166** tries to compile and assemble all files specified, and link and locate them into one output file. There are however, options to suppress the assembler, linker or locator stage. The control program produces unique filenames for intermediate steps in the compilation process. These files are removed afterwards. If the compiler and assembler are called in one phase, the control program prevents preprocessing of the generated assembly file. Normally assembly input files are preprocessed first.

Options

-? Display a short explanation of options at `stdout`.

-V The copyright header containing the version number is displayed, after which the control program terminates.

-Wm*arg*
-Wa*arg*
-Wc*arg*
-Wcp*arg*
-Wpl *arg*
-Wl*arg*
-Wo*arg*
-Wf*arg*

With these options you can pass a command line argument directly to the preprocessor (**-Wm**), assembler (**-Wa**), C compiler (**-Wc**), C++ compiler (**-Wcp**), C++ pre-linker (**-Wpl**), linker (**-Wl**), locator (**-Wo**) or object formatter (**-Wf**). It may be used to pass some options that are not recognized by the control program, to the appropriate program. The argument may be either directly appended to the option, or follow the option as a separate argument of the control program.

-c++ Specify that files with the extension `.c` are considered to be C++ files instead of C files. So, the C++ compiler is called prior to the C compiler. This option also forces the linker to link C++ libraries.

-cc
-cs
-c
-cl
-cf
-cm
-cp

Normally the control program invokes all stages to build an absolute file from the given input files. With these options it is possible to stop after one of the stages or to skip the linker stage.
With the **-cc** option the control program stops after compilation of the C++ files and retains the resulting `.c` files.
With the **-cs** option the control program stops after the C compiler or macro preprocessor, with as output file the assembly source file (`.src`).
With **-c** option the control program stops after the assembler, with as output an object file (`.obj`).
With the **-cl** option the control program stops after the link stage, with as output a linker object file (`.lno`).
The **-cf** option specifies that the Flat Interrupt Concept is followed. The link stage is skipped and all objects are input for the locator. The public scope level of all objects is promoted to global and the default libraries are supplied to the locator.
With the **-cm** option the control program always also invokes the C++ muncher.
With the **-cp** option the control program always also invokes the C++ pre-linker.

-cprep

Use the C preprocessor instead of **m166** on files with a `.asm` suffix.

-f *file*

Read command line arguments from *file*. The filename "-" may be used to denote standard input. To get around the limits on the size of the command line, it is possible to use command files. These command files contain the options that could not be part of the real command line. Command files can also be generated on the fly, for example by the make utility.

Some simple rules apply to the format of the command file:

1. It is possible to have multiple arguments on the same line in the command file.

2. To include whitespace in the argument, surround the argument with either single or double quotes.

3. If single or double quotes are to be used inside a quoted argument, we have to go by the following rules:

    a. If the embedded quotes are only single or double quotes, use the opposite quote around the argument. Thus, if a argument should contain a double quote, surround the argument with single quotes.

    b. If both types of quotes are used, we have to split the argument in such a way that each embedded quote is surrounded by the opposite type of quote.

    Example:

    ```
    "This has a single quote ' embedded"
    ```

    or

    ```
    'This has a double quote " embedded'
    ```

    or

    ```
    'This has a double quote " and \
    a single quote '"' embedded"
    ```

4. Some operating systems impose limits on the length of lines within a text file. To circumvent this limitation it is possible to use continuation lines. These lines end with a backslash and newline. In a quoted argument, continuation lines will be appended without stripping any whitespace on the next line. For non-quoted arguments, all whitespace on the next line will be stripped.

    Example:

    ```
    "This is a continuation \
    line"
        -> "This is a continuation line"

    control(file1(mode,type),\
        file2(type))
        ->
    control(file1(mode,type),file2(type))
    ```

5. It is possible to nest command line files up to 25 levels.

-gs Pass the **-cl** option directly to **ieee166** to set the compatibility mode to 1. This option is only useful in combination with the **-ieee** option.

-ihex
-ieee
-srec When none of these options is supplied to the control program it stops when an absolute `a.out` file is created. With these options you can tell the control program to format the absolute file as Intel hex, IEEE-695 or S-record file.

-lib *directory*
This option specifies the directory where a user defined library set is stored. This applies only to libraries which are known by the control program (`c166*.lib`, `cp166*.lib` `rt166*.lib`, `fp166*.lib`, `can166*.lib` and `fmtio*.lib`). This library set directory is searched for in the linker/locator library path.

Example: libraries searched for when no command line options are given

```
ext\c166s.lib ext\f166s.lib ext\rt166s.lib
```

with for example **-lib mydir**

```
mydir\c166s.lib mydir\f166s.lib
mydir\rt166s.lib
```

-libcan Link the CAN library. Some of the extended architectures like C167CR (ext) contain a CAN controller. All features of this library are described in the ap292201.pdf file which is located in the pdf directory.

-libfmtiol Link the LARGE `printf()/scanf()` formatter library. This library contains all `printf()` and `scanf()` function variants like `sprintf()`, `fprintf()`, etc. The LARGE variant allows the usage of precision specifiers. It also contains floating point I/O support.

-libfmtiom Link the MEDIUM `printf()/scanf()` formatter library. This libary contains all `printf()` and `scanf()` function variants like `sprintf()`, `fprintf()`, etc. The MEDIUM variant allows the usage of precision specifiers. It does not contain floating point I/O support.

If no **-libfmtio*** option is specified on the command line, then the SMALL `printf()/scanf()` formatter variants are linked from the C library. The SMALL variant does not allow usage of precision specifiers, nor does it support floating point I/O.

-libmac Link the MAC optimized run-time library. Some of the extended architectures like ST10x262/272 (ext), XC16x/Super10 (ext2) contain a multiply-accumulate (MAC) co-processor. This option selects the MAC optimized instead of the standard run-time library to get the most out of the MAC coprocessor performance by using the MAC instruction set.

-noc++ Specify that files with the extensions `.cc`, `.cpp` or `.cxx` are considered to be regular C files instead of C++ files. Instead of invoking the C++ compiler, the C compiler is invoked.

-nolib Normally the control program supplies the default C floating point and runtime libraries to the linker (locator when **-cf** is used). Which libraries are needed is derived from the compiler options. The library filenames passed to **l166** have the following format:

PC:

*subdir***c166***model-single**.lib*
*subdir***fp166***model-trap**.lib*
*subdir***rt166***model-single-mac**.lib*

UNIX:

subdir/**c166***model-single**.lib*
subdir/**fp166***model-trap**.lib*
subdir/**rt166***model-single-mac**.lib*

subdir	**Option**
ext	–x (default)
extp	–x –B
ext2 ext2p	–x2 –x2 –B
u*subdir*	–P, user stack model support

model	**Option**
t	–Mt
s	–Ms (default)
m	–Mm
l	–Ml
h	–Mh

–single	**Option**
s	–F or –Fs

trap	**Option**
t	–trap (**cc166** option)

mac	**Option**
m	–libmac (**cc166** option)

Example:

1. When **cc166** is invoked with default options the following libraries are supplied to the linker:

```
ext\c166s.lib ext\f166s.lib 166\rt166s.lib
```

2. When **cc166** is invoked with the options **–x –Ml –F –trap** the following libraries are supplied to the linker:

```
ext\c166ls.lib ext\fp166lt.lib ext\rt166ls.lib
```

3. When **cc166** is invoked with the option **–P** the following libraries are supplied to the linker:

```
uext\c166s.lib uext\fp166s.lib
```

With the **–nolib** option the control program does not supply C, floating point and run-time libraries to the linker or locator.

–nostl With this option the control program does not supply the STLport libraries to the linker for C++ programs.

–nostlo With this option the control program supplies the basic STLport library to the linker for C++ programs, but not the STLport exception library. This can result in a drastic code decrease if the program does not make use of the features provided in the STLport exception library.

–o *file* This option specifies the output filename. The option is supplied to the last stage to be executed, which depends on the options **–c**, **–cl**, **–cs**, **–ieee**, **–ihex**, **–srec**. The option is translated to the option or control needed for the stage it is supplied to (e.g. **TO** *file* when supplied to **l166**). The argument may be either directly appended to the option, or follow the option as a separate argument of the control program.

–tmp With this option the control program creates intermediate files in the current directory. They are not removed automatically. Normally, the control program generates temporary files for intermediate translation results, such as compiler generated assembly files, object files and the linker output file. If the next phase in the translation process completes successfully, these intermediate files will be removed.

–trap
–notrap When this option is specified the control program supplies floating point library with or without trap handling to the linker (or locator when **–cf** is used). See the **–nolib** option for a description of how the library file names are built by the control program.

–v When you use the **–v** option, the invocations of the individual programs are displayed on standard output, preceded by a '+' character.

–v0 This option has the same effect as the **–v** option, with the exception that only the invocations are displayed, but the programs are not started.

–wc++ Enable C and assembler warnings for C++ files. The assembler and C compiler may generate warnings on C output of the C++ compiler. By default these warnings are suppressed.

Environment Variables used by CC166

The control program uses the following environment variables:

TMPDIR	This variable may be used to specify a directory, which **cc166** should use to create temporary files. When this environment variable is not set, temporary files are created in the directory "/tmp" on UNIX systems, and in the current directory on other operating systems.
CC166OPT	This environment variable may be used to pass extra options and/or arguments to each invocation of **cc166**. The control program processes the arguments from this variable before the command line arguments.
CC166BIN	When this variable is set, the control program prepends the directory specified by this variable to the names of the tools invoked.

10.4 D166

Name

d166 disassemble an `a.out` file

Synopsis

d166 [*option*]... [*file*]...
d166 **-V**
d166 **-?** (UNIX C-shell: **"-?"** or **-\?**)

Description

With the disassembler you can read relocatable and absolute C166/ST10 `a.out` object files which are output of the assembler, linker or locator. It is possible to disassemble all or selected sections or address ranges. For relocatable files relocation information is added to the disassembled output. The disassembler is able to replace addresses with symbols found in the object file or with registers defined in a register definition file.

The *file* argument is the name of a C166/ST10 `a.out` object file. If no file is given, the file `a.out` is used.

Options

Options start with a dash '-'.

The *option*s only apply to the file after the options.

For example:

```
d166 file.out -S
```

makes no sense because the **-S** option is not supplied before the filename.

-? Display explanation of options

-B[*flags*] Enable the Byte Forwarding Detection. (See also paragraph *Byte Forwarding* below.) When no *flags* are specified only an error is issued when the byte forwarding problem sequence occurs and all addresses are known. When **-Bi** is not set, indirect addressing is assumed to be outside the internal RAM. When the following *flags* are set, additional checking is done:

i Generate a warning when the byte forwarding problem can occur if indirect addresses result in operations on internal RAM.

j Generate a warning when an instruction which performs a byte write is detected and the following instructions is a jump instruction which can have a cache hit.

m Enable checking on direct addresses (MEM operands). The disassembler checks only the page offset (POF) of absolute addresses. This means that all addresses in each page between 3A00h and 3DFFh are detected as internal RAM addresses. If not set, direct addresses are ignored.

–C Set all columns to default values.

–Cl *col* Print labels in column *col* (default=18).

–Co *col* Print opcode in column *col* (default=28).

–Cc *col* Print comments in column *col* (default=60).

–E Also write messages to output file.

–S List only section header lines. Use this option to display the names of the sections in the file.

–V Display version header

–a *addr1*[,*addr2*]
Disassemble only between addresses *addr1* and *addr2*. Specify the addresses as hexadecimal values. When only *addr1* is supplied the disassembler starts at this address. Section headers are always printed. When switching from printing to skipping and vice versa the disassembler prints 'skipping ...'.

–c[**r**] Supply comment about operand combinations. When **–cr** is specified relocation information (when available) is printed as comment.

–d Suppress DPP prefixes. All addresses are by default prefixed with "DPPn:".

–f Do not substitute SFR and BIT addresses by the name specified in the register definition file.

–h Suppress address and data column. This are the first two hexadecimal columns in the output.

–l Print all keywords in lowercase. By default all keywords are printed in uppercase.

–m Allow MAC instructions

–n Do not substitute addresses with symbol names as read from the object file.

–o *file* Write output to specified *file*.

–u Display also unresolved symbols. The address of an unresolved external is usually not fixed. For this reason addresses will not be replaced by names of unresolved externals.

–s *name* Disassemble only sections with *name*. It is possible to supply several **–s** options. Use the **–S** option to print the names of all sections in the input file.

–r *file* Read SFR and BIT definitions from *file* (See also paragraph *Register Definition Files* below).

–x2 Use the extended instruction set, or the extended 2 instruction set for the XC16x/Super10 architectures.

–x22 Use instruction set for Super10 m345 derivatives.

Data and Bit Sections

Data sections (DATA, LDAT HDAT, PDAT) are filled with DB or DW directives, depending on the section align type. Word aligned sections are filled with DW directives and byte aligned sections are filled with DB directives.

Bit sections are not disassembled.

Gaps

A gap in a section can be introduced by one of the following assembler directives:

DS, DSB, DSW, DSDW, ORG or EVEN

The disassembler cannot derive from the object file which of these directives caused the gap and will always print an ORG directive with a target address.

Register Definition Files

The special function registers are read from a register definition file. By default the file `reg166.def` is read. You can use the **-r** and **-x** option to specify an alternate register definition file. The following directories are searched for this file:

- the current directory.
- when the A166INC environment variable is set, the directory specified in this environment variable.
- the `etc` directory at the same level as the directory containing the **d166** executable.

Example (PC):

when **d166** is installed in `\c166\bin` the directory `\c166\etc` is searched for register definition files.

Example (UNIX):

when **d166** is installed in `/usr/local/c166/bin` the directory `/usr/local/c166/etc` is searched for register definition files.

The register files contain assembler directives DEFA, DEFB and DEFR for specifying registers. LIT directives are ignored. The syntax is compatible with the register files supplied to the assembler with the STDNAMES assembler control.

Comments

With the **-c** option the disassembler adds comments to the generated output. This comment displays the operand combination according to the opcode. For relocatable object files it is possible to display information about the relocation types at the code locations which contain relocation information (option **-cr**).

Byte Forwarding

For the detection of the CPU problem ”Erroneous Byte Forwarding for internal RAM locations” as described in the Infineon errata sheets 88C166 ES-BA (Sept.,15,1992) (flash), the disassembler has the option **-B**.

The disassembler cannot check on (possible) modification of the active register bank by absolute MEM addressing (direct) in that memory area. With an exception when **-Bi** is set, which also causes a warning to be issued on sequences with a GPR and an indirect addressing mode.

When an erroneous byte forwarding sequence is detected with only absolute addresses (only with **-Bm**), GPR addressing and bit offset addressing (BOF) the disassembler issues the following error:

```
ERROR: module: byte forwarding sequence detected
      section addr1: byte write - addr2: read in op operand
```

When the byte forwarding sequence contains indirect addressing and **-Bi** is set the following warning will be issued instead of the error:

```
WARNING: module: possible byte forwarding sequence detected
      section addr1: byte write - addr2: read in op operand
```

When the condition described with **-Bj** is detected the following warning is issued:

```
WARNING: module: possible cache jump after byte write
      section addr1: byte write - addr2: jump
```

In these messages the following information is printed:

section	the name of the section in which the sequence is detected
addr1	the address of the instruction which performs the byte write
addr2	the address of the instruction which performs possible erroneous read or the possible cache jump
op	indicates read access on left or right operand

When the output of the disassembler is redirected to a file (option **-o *filename***) the error messages are still printed on the standard screen output. The **-E** option specifies that these message are printed in the output file.

Example:

The following example checks for the Erroneous Byte Forwarding Sequences and for possible cache jumps after a byte write (**-Bj**):

```
d166 -o myfile.dis -E -Bj myfile.out
```

The disassembly output and the error message are written to the file `myfile.dis` (**-o *filename*** and **-E** option).

The disassembler can be used to disassemble relocatable object files (assembler and linker output) or absolute object files (locator output). However, the **-Bm** option makes only sense when disassembling absolute object files or object files which contain absolute addresses.

10.5 DMP166

Name

dmp166 report the contents of an object file or library file

Synopsis

dmp166 [*option*]... [*file*]...
dmp166 –V
dmp166 –? (UNIX C-shell: **"–?"** or **–\?**)
dmp166 –f *invocation_file*

Description

dmp166 gives a complete report of all files in the argument list which have been created by the assembler or linker/locator. The files must be valid C166/ST10 object files or library files. If no file is given, the file `a.out` is displayed.

Options

Options start with a dash '-'. Options can be combined after one dash. For example **–vhxh** is the same as **–v –h –xh**.

–? Display an explanation of options at stdout.

–V Display version information at stderr.

–a Display the string area of the input file.

–c Display the code bytes of each section.

–e Display the extension records of the input file.

–f *invoc_file* Specify an invocation file. An invocation file can contain all options and file specification that can be specified on the command line. A combination of an invocation file and command line options is possible too.

–h Display the header record of the input file.

–n Display the symbol table records of the input file.

–o *file* Use specified *file* for output.

–p Display function names from the symbol table (used for C++)

-r Display the relocation records of the input file.

-s Display the section records of the input file.

-xa Display allocation records.

-xh Display extension header record.

-xr Display range records.

-v Verbose mode. Display also section names when a reference to a section number is made. Type information is also decoded into symbolic names as mentioned in `out.h` and `sd_class.h`.

All options except the **-p**, **-v**, **-V** and **- ?** options are on by default. The use of any option except the **-o** and **-v** options turns off all other options.

10.6 GSO166

Name

gso166 global storage optimizer

Synopsis

gso166 *sif/gso files...* **-o***file* [*options*]
gso166 -V
gso166 -? (UNIX C-shell: **"-?"** or **-\?**)
gso166 -f *invocation_file*

10.6.1 DESCRIPTION

The global storage optimizer **gso166** is a tool that optimizes the allocation of global variables. Variables are located in the best suitable place in memory (near, far, ...). The compiler **c166** and the global storage optimizer **gso166** work closely together. To achieve optimal allocation, a full build of an application consists of three phases:

1. **c166** and **a166** gather statistics of all global objects in the application.
2. **gso166** assigns storage for each global object.
3. **c166** takes the output of **gso166** as input for a final build of the application.

Phase 1: Gathering Information

During this phase, the tools acquire statistics on all global objects. The information consists of: name, size, reference count, linkage, memory qualifiers, memory-type (const or non-const object) and whether or not objects are referenced by their address.

To obtain the necessary information, the entire application is processed by **c166** and/or **a166**. For the **c166**, use the **-gso** option to generate the statistics. See section *Detailed Description of the C166 Options* in Chapter *Compiler Use* of the *C Cross-Compiler Users Manual*. For the **a166**, use the control: **GSO**. See section 6.3, *Description of A166 Controls*.

Example:

```
c166 c_module.c -gso    ; Generate: c_module.sif

a166 a_module.src GSO   ; Generate: a_module.sif
```

To eliminate side effects, C-files that use **#pragma asm** and **#pragma endasm** are best processed by **c166** without the **-gso** option. Without the **-gso** option, the compiler generates an `.src` file, so the statistics have to be generated by **a166**. This method is only useful if the instructions inside **#pragma asm/endasm** have anything to do with global objects.

Objects that are not specifically allocated in a particular memory space with memory qualifiers (near, far, ...), are candidates for automatic allocation. For these objects the memory space is set to 'AUTO' in the generated output.

In addition, **c166** and **a166** generate information for memory areas that are definitely used during the final rebuild. These memory areas are not available to **gso166** for automatic allocation and are therefore reserved. See section 10.6.6, *Reserved Memory Areas* for detailed information.

The tools store their results in Source Information Files (`.sif`). The format of the `.sif` file is described in section 10.6.9, *.gso / .sif File Format*.

Though **a166** generates `.sif` files, objects defined in assembly modules are never candidates for automatic allocation. These objects are already allocated in a particular section which binds the object to a specific memory space. The information generated by **a166** however, is needed by **gso166**. As described in the next section, **gso166** must be able to pre-link the application. Therefore the `.sif` files generated by **a166** are needed to resolve all symbols.

Phase 2: Information Processing and Allocation

In this phase **gso166** assigns storage for all objects that are allocated in the 'AUTO' memory space. To do this as optimal as possible, **gso166** must have an application wide overview of all available global objects. This includes all global objects in libraries and other pre-build objects. Therefore, all `.sif` and `.gso` files must be supplied to **gso166**, including those related to the applied libraries. Section 10.6.5, *Creating GSO Libraries* describes how to generate libraries for **gso166**.

When **gso166** has read all `.sif` files, it will pre-link the application. During the linking process reference counts, object sizes, memory spaces etc. are administered.

The next step is to subtract the sizes of all objects that are already specifically attached to a memory space from the total available memory. Reserved areas are also subtracted from the total available memory. The amount of memory that remains can be used for automatic allocation.

After sorting the candidates in the optimal allocation order (The goal is to reduce code size), **gso166** assigns storage to all objects in the 'AUTO' memory space. Objects that are expected to reduce code size the most, are preferred to be allocated in short addressable memory.

Phase 3: Final Build

During this phase the final build of the application takes place. In general this build does not differ from a normal application build without global storage optimization. The only difference is that the information generated by **gso166** is now used when the C modules are compiled. You can specify allocation information to **c166** with the option: **-gso=file.gso**.

Example:

```
c166 module.c -gso=module.gso
```

This generates 'module.src' with the global objects allocated as specified in the 'module.gso' file.

Section 10.6.11, *Example Makefile* shows an example makefile which you can use to build an application with **gso166**.

10.6.2 MEMORY MODELS

gso166 recognizes the same memory models as **c166**: TINY, SMALL, MEDIUM, LARGE and HUGE. You can specify the memory model to gso166 with a directive in the `.sif` files:

$MODEL(*memory_model*)

Where *memory_model* is one of:

$MODEL()	corresponding **c166** option
TINY	**-Mt**
SMALL	**-Ms**
MEDIUM	**-Mm**
LARGE	**-Ml**
HUGE	**-Mh**

If the $MODEL() directive is omitted, the SMALL memory model is assumed. You cannot mix memory models.

10.6.3 MEMORY SPACES

The memory spaces used by **gso166** are a subset of the memory spaces used in the compiler. Each memory space is divided into a RAM part and a ROM part. Objects that are declared "const" at C-level must be allocated in ROM, others are allocated in RAM.

The memory spaces used by **gso166** and their default properties are listed below:

Space	Size (bytes)				Maximum Object Size (bytes)			
	non-segmented		segmented		non-segmented		segmented	
	RAM	ROM	RAM	ROM	RAM	ROM	RAM	ROM
NEAR	49152	0	16384	0	49152	0	16384	0
SYSTEM	12288	0	12288	0	12288	0	12288	0
IRAM	3072	0	3072	0	3072	0	3072	0
XNEAR	n.a.	n.a.	16384	0	n.a.	n.a.	16384	0
FAR	Inf.	Inf.	Inf.	Inf.	16384	16384	16384	16384
SHUGE	Inf.	Inf.	Inf.	Inf.	65535	65535	65535	65535
HUGE	Inf.	Inf.	Inf.	Inf.	Inf.	Inf.	Inf.	Inf.

Note 1 Since the **-m***mem*=*size*[**:***rom-part*] option can only be used to decrease the size of the memory space, the size of IRAM is default set to the largest known IRAM size. For most derivatives the IRAM size must be decreased with the **-m** option.

Note 2 By default **gso166** assumes only ROM in the FAR, SHUGE and HUGE memory spaces. Constant objects will therefore be allocated in one of these memory spaces by default. The **-m** option can be used to add rom-areas in one of the other memory spaces.

Table 10-2: Default properties of memory spaces used by gso166

The memory spaces listed above are used during the automatic storage allocation process. In addition, **gso166** is aware of the following two memory spaces:

Space	Size				Maximum Object Size			
	non-segmented		segmented		non-segmented		segmented	
	RAM	ROM	RAM	ROM	RAM	ROM	RAM	ROM
BITA	256 (bytes)	0	256 (bytes)	0	256 (bytes)	0	256 (bytes)	0
BIT	2048 (bits)	0	2048 (bits)	0	1 (bit)	0	1 (bit)	0

Table 10-3: Default properties memory spaces that overlap IRAM

These two memory spaces are not used during the automatic allocation process but overlap the IRAM memory space. So, a reservation or a direct allocation in one of the memory spaces will influence the available space in the IRAM memory space.

You can set most of the properties of the above listed memory spaces with the **-m** and **-T** command line options. The **-m** option controls the available memory in a particular space. The **-T** option controls the maximum object size that can be allocated in a particular memory space. See section 10.6.8, *Options* for the details of the options **-m** and **-T**.

Each time **gso166** generates a `.gso` file, it will set the $GSO166 directive in this file. **c166** does not accept a file that does not have this directive. A file that has both the $GSO166 directive and an object allocated in memory space 'AUTO', is considered invalid.

10.6.4 PRE-ALLOCATION FILES

With a pre-allocation file **gso166** can be forced to allocate a particular object into a certain memory space. The memory specified in a pre-allocation file is applied after linking the application. You cannot overwrite any memory space other than the 'AUTO' memory space.

You can specify pre-allocation files on the command line with the **-a** option. Multiple **-a** options (pre-allocation files) are allowed.

The format of pre-allocation files is described in section 10.6.10, *Pre-allocation File Format*.

10.6.5 CREATING GSO LIBRARIES

If the application uses libraries or other pre-build components, each component (.LIB/.OBJ) must have a matching `.gso` (archive) file. The $ARCHIVE directive signals **gso166** that a `.gso` file is an archive.

You can create a `.gso` archive with the **–q***file* option. When you create an archive (sub-application), **gso166** does not have an application wide overview of all global objects in the application. Therefore the use of the **–q** option implies the **–d** option that forces all objects to be allocated in the default memory space for a particular memory model. See section 10.6.8, *Options* for more details of the options **–d**.

It is crucial that the information in a `.gso` archive file matches the allocation in a `.obj` (`.lib`) file. Therefore you must build a matching `.gso` <-> `.obj` file pair with **gso166**.

The TASKING libraries are not delivered in a pre-build `.gso` format. However, you can rebuild all libraries with:

mk166 GSO=

This command creates a matching `.gso` <-> `.obj` file pair. For example, when building the C Library for the LARGE memory model, this command will create:

```
c166l.gso  ; To be used with gso166.
c166l.asif ; Summary of global allocations in library.
```

and

```
c166l.lib  ; To be used with l166.
```

For more details on how to rebuild libraries, please refer to Chapter 6.1, *Libraries* in the *C Cross-Compiler User's Manual*.

Please use the makefiles for the TASKING libraries as an example for how to build your own libraries.

IMPORTANT: A mismatch between the information in a `.gso` file and a pre-build component may result in run-time errors.

The key to the highest possible code size reduction is flexibility. Therefore, the use of pre-build objects is discouraged. It is advised to use components at source level as much as possible.

10.6.6 RESERVED MEMORY AREAS

c166 and **a166** reserve memory blocks because these areas also need space during the final rebuild. Therefore **gso166** cannot use these memory areas for automatic allocation. The following memory areas are reserved:

Areas Reserved by c166

- String constants.
- ROM copy of initialized data.
- User stack areas.
- Switch tables.
- Initialization sections. (C166_INIT and C166_BSS)
- Static objects with function scope.
- Struct/union return values.

Areas Reserved by a166

- Depending on SSKDEF, **a166** will reserve an area in IRAM for the system stack.
- **a166** cannot determine individual object sizes. However, it will reserve the total space needed for all objects in a source (`.src`) file.

Other memory areas that are not known to **gso166** and other tools you must reserve manually. You can do this for example by using a pre-allocation file or the **-m** command line option. If you omit this, problems can occur when the application is located.

An example of memory that needs to be reserved manually is the space needed for register banks.

Example:

If one register bank is needed, make a pre-allocation file with the following contents::

```
$RESERVE(IRAM,32)
STARTSIF
ENDSIF
```

Specify this file to **gso166** with the **-a***file* option.

c166 is unable to reserve memory for space consumed by alignments (EVEN directive). Therefore it is advised to decrease the available memory slightly by with the **–m** option. This will ease locating the application. Of course when you want to get the most out of **gso166**, the optimal value for the **–m** options can be determined through an iterative process.

You may reserve areas in the memory spaces FAR, SHUGE and HUGE. However, for **gso166** these memory spaces have an infinite size. Therefore reserving in these areas does not have any effect.

10.6.7 ORDERING .SIF / .GSO FILES ON THE COMMAND LINE

The order of the `.sif` and `.gso` files on the command line can be important when you use archives. Suppose there are two archive files that both contain a module called 'MOD_C'. In this case **gso166** will use 'MOD_C' from the archive specified first on the command line.

Suppose you have an archive file that defines 'MOD_C' and a single `.sif` or `.gso` file (not an archive) in which 'MOD_C' is also defined. In this situation the order on the command line is not important. **gso166** will always use 'MOD_C' from the single `.sif` or `.gso` file, overruling the module definition in the archive.

gso166 always generates a warning when two or more modules with the same name are detected.

10.6.8 OPTIONS

–? Display an explanation of options at stdout.

–T*mem*=*size1*[**:***size2*]
Do not allow objects larger than the specified threshold to be allocated in memory space *mem*. Memory *mem* can be one of NEAR, FAR, SHUGE, SYSTEM, IRAM or XNEAR.

Argument *size1* is the threshold for objects to be allocated in the RAM area, *size2* is the threshold for objects to be allocated in the ROM area.

The threshold cannot be larger than the available number of bytes in the given memory space.

The table below shows for which memory models the options **-T** and **-m** can be used:

Space	**-T***mem*=*size1*[**:***size2*]	**-m***mem*=*size*[**:***rom-part*]
NEAR	Yes	Yes
SYSTEM	Yes	Yes
IRAM	Yes	Yes
XNEAR	Yes	Yes
FAR	Yes	No
SHUGE	Yes	No
HUGE	No	No
BIT	No	Yes
BITA	Yes	Yes

-V Display version information at stderr.

-a*file* Specify pre-allocation files.

-d Allocate objects in the default memory space of the given memory model. Default memory spaces are:

Memory model	Space
TINY	NEAR
SMALL	NEAR
MEDIUM	FAR
LARGE	FAR
HUGE	HUGE

You can overrule the default memory space using a pre-allocation file.

-err Send diagnostics to an error list file (`.err`).

-f *invoc_file* Specify an invocation file. An invocation file can contain all options and file specification that can be specified on the command line. A combination of an invocation file and command line options is possible too.

-m*mem*=*size*[**:***rom-part*]
The *size* argument specifies the maximum available bytes in memory space *mem*. Memory *mem* can be one of: BIT, BITA, NEAR, SYSTEM, IRAM, XNEAR.

The optional *rom-part* specifies how many bytes from *size* is ROM memory.

When you do not specify the option **-m**, or omit the *rom-part*, the default values as described in section 10.6.3, *Memory Spaces* are assumed. See also the option **-T**.

-o*file* Specify the allocation file for the whole application. You must always specify this option.

-p*path* Write `.gso` files to the directory *path*.

-q*file* Create a `.gso` archive. This option implies option **-d**.

-s Sort the application file by allocation order. If you do not specify this option, the file is sorted alphabetically.

-t Generate an allocation summary in the application file as specified in the **-o** option.

-u Force an update of all `.gso` files.

-w[*num*] Disable the output of warnings. With *num* you can disable a specific warning.

10.6.9 .GSO/.SIF FILE FORMAT

An `.gso` and `.sif` file has the following generic format:

```
[directives]

STARTSIF
     [module definitions]
ENDSIF
```

A directive can be one of the following:

$MODEL(*memory_model*)
Specify memory model where memory_model can be one of:

TINY
SMALL
MEDIUM
LARGE
HUGE

$GSO166 Indicates that file is generated by **gso166**.

$ARCHIVE Indicates an .gso library file.

Between the keywords STARTSIF and ENDSIF zero or more modules can be defined. A module definition has the following format:

```
MODULE(module_name)

      [RESERVE(space[,memory-type],size)]
      [OBJECT DEFINITIONS]

ENDMODULE
```

The module keyword takes the module name as an argument. Between the MODULE and ENDMODULE keywords you can:

- Reserve memory in a particular memory space with the RESERVE keyword.
- Define statistics on global objects.

A module can be empty.

The RESERVE keyword takes three arguments, from which the second is optional: The first argument specifies the memory *space* in which *size* bytes have to be reserved. You must specify the size in bytes for all memory spaces, except for BIT. For this space the size must be specified in bits. In the reserve control the *space* can be one of the following: BIT, BITA, NEAR, SYSTEM, IRAM, XNEAR, FAR, HUGE, SHUGE. The optional *memory-type* denotes the area in which the reservation will taken place: ROM or RAM. The *memory-type* can be one of the following:

RO	Read-only memory
RW	Read-write memory

When the *memory-type* argument is omitted, **gso166** assumes *memory-type*: RW.

For **gso166** the memory spaces FAR, HUGE and SHUGE have infinite size. You can reserving areas in these memory spaces but this will not have any effect.

The statistics on global objects are stored in a line based format. Each line contains the following information:

identifier refc size linkage memory address [*memory-type*]

identifier	The object name.	
refc	The number of references made by the C-code to the object (Static initializations are not counted) or NOTSET.	
size	The object size in bytes (or in bits for objects in BIT memory) or NOTSET.	
linkage	PUBLIC LOCAL EXTERN	
memory	AUTO BIT BITA NEAR FAR HUGE SHUGE SYSTEM IRAM XNEAR CODE	Candidate for automatic allocation Used for functions.
address	TRUE FALSE	Object referenced by its address. Object not referenced by its address.
memory-type	RO RW This field is optional. When omitted, **gso166** assumes *memory-type*: RW.	Read-only memory Read-write memory

A semi-colon in a `.gso` or `.sif` file indicates that the remaining part of that line is comment.

The keywords in a `.gso` or `.sif` file are case insensitive.

If an identifier has the same name as a keyword, you must embed in double quotes.

Below is an example **.sif** file generated by **c166**:

```
$MODEL(SMALL)

STARTSIF

MODULE(GSO_C)

RESERVE(FAR,16)

; identifier   refc   size     linkage   memory   address
  _i           1      2        PUBLIC    AUTO     FALSE
  _fill_array  1      NOTSET   EXTERN    CODE     FALSE
  _main        0      NOTSET   PUBLIC    CODE     FALSE
  _array       0      131070   PUBLIC    HUGE     FALSE
  __CSTART     1      NOTSET   EXTERN    CODE     FALSE

ENDMODULE

ENDSIF
```

This **.sif** file was generated from the following C-code:

```
unsigned int i;
_huge int array[65535];

extern void fill_array( unsigned int offset );

void main( void )
{
     i = 32768;
     fill_array( i );
}
```

10.6.10 PRE-ALLOCATION FILE FORMAT

The format of a pre-allocation file is similar to that of a **.gso** or **.sif** file. The general format is:

```
[directives]

STARTSIF
     [<PRE-ALLOCATION SPECIFICATION>]
ENDSIF
```

A directive can be one of the following:

$MODEL(*memory_model*)
: Allowed but ignored by **gso166**.

$GSO166 Allowed but ignored by **gso166**.

$ARCHIVE Allowed but ignored by **gso166**.

$RESERVE(*space*[,*memory-type*],*size*)
Make additional memory reservations.

Between the keywords STARTSIF and ENDSIF you can assign the storage of global objects. The format is line based:

scope:*identifier* [*refc*] [*size*] *memory* [*address*] [*memory-type*]

scope PUBLIC or the module name as specified in the module keyword. PUBLIC indicates a global object with application scope. When a module name is specified the object is considered to be local to that module.

identifier Object name.

refc Reference count, optional, ignored by **gso166**.

size Object size, optional, ignored by **gso166**.

memory Memory space where object has to be allocated. Memory can be one of:
BIT
BITA
NEAR
FAR
HUGE
SHUGE
SYSTEM
IRAM
XNEAR

address TRUE if object is referenced by its address. Optional, ignored by **gso166**.

memory-type RO Read-only memory
RW Read-write memory
This field is optional, and ignored by **gso166**.

A semi-colon in a pre-allocation file indicates that the remaining part of that line is comment.

The keywords in a pre-allocation file are case insensitive.

If an identifier has the same name as a keyword, you must embed in double quotes.

The reason for so many ignored fields is that this way the **.asif** file generated by **gso166** can be used as a (basis for a) pre-allocation file. A sample pre-allocation file generated by **gso166** (**.asif**) is given below:

```
; C166/ST10 GSO    vx.y rz    SN00000000-014 (c) year TASKING, Inc.
; -ogso.asif -t

$MODEL(LARGE)
$GSO166

STARTSIF

; scope     identifier   refc   size     memory   address
  PUBLIC:   _array       1      131070   HUGE     FALSE
  GSO2_C:   _i           5      2        NEAR     FALSE
  PUBLIC:   _i           1      2        NEAR     FALSE

ENDSIF
;
; ALLOCATION SUMMARY:
;
; space         refc        (%)       size     (hex)    objects
; ============================================================
; NEAR             6    ( 85.7)          4 (000004h)          2
; HUGE             1    ( 14.3)     131070 (01FFFEh)          1
;             -------    -------    ------- ---------   -------- +
; total            7    (100.0)     131074 (020002h)          3
;
; RESERVED:
;
; FAR             26 (00001Ah)
; IRAM           512 (000200h)
; XNEAR            2 (000002h)
```

When a the same pre-allocation file has to be written by hand it can be reduced to:

```
STARTSIF
PUBLIC:   _array   HUGE
GSO2_C:   _i       NEAR
PUBLIC:   _i       NEAR
ENDSIF
```

Because of this file format, **gso166** can easily generate a clear application wide allocation view combined with the possibility to use the **.asif** file as a pre-allocation file. Since all global object are listed in a **.asif** file, it is suitable for exactly rebuilding the application when necessary. This is in case of allocation issues.

10.6.11 EXAMPLE MAKEFILE

```
all             : application.asif
                  mk166 application.abs

# ------------------------------------------------------------------
# Phase 1: Obtain statistics on global objects.
# ------------------------------------------------------------------

module1.sif     : module1.c module1.h
                  c166 -gso module1.c

module2.sif     : module2.c module2.h module1.h
                  c166 -gso module2.c

module3.sif     : module3.asm
                  m166 module3.asm
                  a166 module3.src GSO

# ------------------------------------------------------------------
# Phase 2: Assign storage to all global objects.
# The result is a .gso file for each .sif file.
# ------------------------------------------------------------------

application.asif : module1.sif module2.sif module3.sif
      gso166 module1.sif module2.sif module3.sif -oapplication.asif

# ------------------------------------------------------------------
# Phase 3: Rebuild the application using the result of gso166 as
# input to c166. The .obj file also depends on the .gso file.
# ------------------------------------------------------------------

module1.obj     : module1.gso module1.c module1.h
                  c166 -gso=module1.gso module1.c
                  a166 module1.src

module2.obj     : module2.gso module2.c module1.h module2.h
                  c166 -gso=module2.gso module2.c
                  a166 module2.src

module3.obj     : module3.asm
                  m166 module3.asm
                  a166 module3.src

# ------------------------------------------------------------------
# Continue as usual, link, locate and convert to IEEE.
# ------------------------------------------------------------------

application.out  : module1.obj module2.obj module3.obj
cc166 -o application.out module1.obj module2.obj module3.obj -cf -v

application.abs  : application.out
                   ieee166 $! $@
```

10.7 IEEE166

Name

ieee166 format `a.out` absolute object code to standard IEEE-695 object module format

Synopsis

ieee166 [**-s***startaddr*] [**-c***mode*] *inputfile outputfile*
ieee166 -V
ieee166 -? (UNIX C-shell: **"-?"** or **-\?**)
ieee166 -f *invocation_file*

Description

The program **ieee166** formats a TASKING `a.out` file to IEEE-695 Object Module Format, as required by the CrossView Pro debugger. The input file must be a TASKING `a.out` load file, which is already located.

The section information and data part are formatted to IEEE format. If the `a.out` file contains high level language debug information, it is also formatted to IEEE debug records.

Options

-? Display an explanation of options at stdout.

-V Display version information at stderr.

-c*mode* Set compatibility mode with older versions of **ieee166** to *mode*. This option makes the output strict IEEE-695. By default no compatibility mode is set, the output file is generated using the latest updates. The following modes are available:

- **1** No distinction between register parameters and automatics.
- **2** No distinction between stack parameters and automatics and no stack adjustments.

-f *invoc_file* Specify an invocation file. An invocation file can contain all options and file specification that can be specified on the command line. A combination of an invocation file and command line options is possible too.

–s*startaddr* Define the (hex) execution start address of the IEEE file. If you omit this option, the default execution start address is 0.

–v*num* Define the interrupt vector size in words (default=2). If you program for the ext2 architecture and the interrupt vector size is larger than two words, you have to specify the new size.

10.8 IHEX166

Name

ihex166 format object code (absolute located TASKING `a.out`) into Intel hex format

Synopsis

ihex166 [*option*]... [*infile*] [**-o** *outfile*]
ihex166 -V
ihex166 -? (UNIX C-shell: **"-?"** or **-\?**)
ihex166 -f *invocation_file*

Description

ihex166 formats object files and executable files to Intel hex format records for (E)PROM programmers. Hexadecimal numbers A to F are always generated as capitals.

Empty sections in the input file are skipped. No empty records are generated for empty sections.

The program can format records to Intel hex8 format (for addresses less then 0xFFFF), Intel hex16 format and Intel hex32 format. When a section jumps over a 64k limit the program switches to hex32 records automatically. It is the programmers responsibility that sections do not intersect with each other.

Addresses that lie between sections are not filled in.

The *output* does not contain symbol information.

There is no need to place the input and output file names at the end of the command line. If data is to be read from standard input and the output is not standard output, the output file must be specified with the **-o** option.

If only one filename is given, it is assumed that it is the name of the input file hence output is written to standard output. It is also possible to omit both the input filename and the output filename. In that case standard input and standard output are used.

Options

Options must be separated by a blank and start with a minus sign (-). Decimal and hexadecimal arguments should be concatenated directly to the option letter.

Options may be specified in any order.

Output filenames should be separated from the **-o** option letter by a blank.

Example:

```
ihex166 myfile.out -l20 -z -i32 outfile.hex
```

The next example gives the same result:

```
ihex166 -l20 -z -i32 -o outfile.hex < myfile.out
```

-? Display an explanation of options at stdout.

-V Display version information at stderr.

-a*address* The specified address is added to the address of any data record. If *address* is greater than FFFFh then hex32 will be used.

-c*address* This option specifies the start address which is loaded into the processor. The start address is placed in the 'end-of-file' record. If *address* is greater than FFFFh then hex32 will be used.

-e*hex* *hex* is the length of the data output. Use this option in combination with **-p** option. If you do not specify the **-p** option, the base of the first section is used. You can specify another section with the **-s** option. Only one section will be converted when you use the **-e** option. You must have a clear view of the sizes and base addresses of the sections when you use the **-p** and **-e** options.

Example:

```
ihex166 -s2 -eFF myfile.out
```

outputs the first 255 bytes of the third section of the file `myfil.out` to the standard output.

```
ihex166 -s2 -pFF -eFF myfil.out
```

outputs the second 255 bytes of the third section. The convertor checks whether the section end address is exceeded.

-E*number* Generate only lines with an even number of bytes. If you specified an odd number of bytes with the **-l** option, this option adds the extra byte *number* (unless the maximum line length is reached). *number* must be in the range 0 - ff.

Example:

```
ihex166 -Ec3 input.hex -o output.hex
```

adds 'C3' to all data records with an odd number of bytes.

-f *invoc_file* Specify an invocation file. An invocation file can contain all options and file specification that can be specified on the command line. A combination of an invocation file and command line options is possible too.

-i8 Output of Intel hex8 records for addresses up to 0xFFFF. This is the default record format.

-i16 Output of Intel hex16 records.

-i32 Output of Intel hex32 records, i.e. extended address records with a segment base address are generated for every section. This format is also used when a 64k boundary is crossed.

-l*count* Number of data bytes in the Intel hex format record. The number of characters in a line is given by *count* * 2 + 11. The default *count* is 32.

-m*addresslist*

Map sections to different addresses. *addresslist* must be list of addresses separated by commas. The first address corresponds with the first section or, with the **-s** option, to the first address selected section. You can override this with indices between **[ ]** just before the addresses.

Examples:

```
ihex166 -s5,3 -m1200,1300
```

selects sections 5 and 3. Maps section 5 to address 01200h and section 3 to address 01300h.

```
ihex166 -s5,3,1 -m1200,1300
```

as above but section 1 is processed without remapping.

```
ihex166 -s5,3 -m1200,1300,1400
```

issues a warning if you specify more sections with **-m** than are selected with **-s**.

```
ihex166 -s5,3,1 -m[1]1200,[3]1300
```

select sections 5, 3 and 1. Maps section 1 to address 01200h and section 3 to address 01300h. Section 5 is processed without remapping.

```
ihex166 -s5,4,1 -m[1]1200,[3]1300
```

issues a warning if you specify a section with **-m** that is not selected with **-s**.

-M*range*=*address*
Remap data addresses based on address ranges. You can specify several remap ranges separated by commas.
All section start addresses that fall within the specified ranges are remapped.

Examples:

```
ihex166 -M0-8000=4000
```

shifts all data that starts between 0 and 08000h by 04000h.

```
ihex166 -M10000-20000=20000,20000-30000=10000
```

swaps the data in segment 1 and 2.

-o *outfile* *outfile* is the name of the file to which output is written. This option must be used if the input is standard input and the output must be written in a file.

-O Order sections by address (ascending).

-Od Order sections by address (descending).

-p*offset* *offset* is the offset in a section at which the output must start. If no section number is specified with the **-s** option, then bytes are skipped in the first record found. The user should be aware of the fact that there is no detection of skipping an entire section in a file. The **-p** option may not occur more than once in a command line. Warning: sections are adjacent in the input file, but do not have to be contiguous in memory!

-P Generate an address record each time a page boundary is encountered. Normally, address records are only generated when segment boundaries are passed.

-r Emit address records at every start of a new section. This results in redundant address records in the output, but some convertors need this information.

-s*sectlist* *sectlist* is a list of section numbers that must be written to output. The section numbers must be separated by commas. Note: section numbers start at 0 and can be found with the **dmp166** utility. If you use this option in combination with the **-e** option, only the first section in *sectlist* will be converted.

-S*rangelist* Select data for processing based on address ranges. *rangelist* must be a list of address ranges separated by commas. These address ranges are not checked for overlap or adjacency. If a section falls in two ranges, only the part that fits in the first range is processed.

Example:

```
ihex166 -S0-4000,10000-14000
```

selects pages 0 and 4 for processing.

-t Skip generation of the termination record. Normally every .hex file is closed with a termination record. With this option you can append output of a second ihex166 run to the output of this run.

Example:

```
ihex166 -s2 -a2000 input.out -t > output.hex
ihex166 -s3 -a4000 input.out >> output.hex
```

this appends the output of the second run to the output of the first run. The second run generates the appropriate termination record.

-w Select word address count instead of byte address count.

-z Do not output records with zeros (0x00) only.

10.9 MK166

Name

mk166 maintain, update, and reconstruct groups of programs

Syntax

mk166 [*option*]... [*target*]... [*macro*=*value*]...
mk166 –V
mk166 –? (UNIX C-shell: **"–?"** or **–\?**)

Description

mk166 takes a file of dependencies (a 'makefile') and decides what commands have to be executed to bring the files up-to-date. These commands are either executed directly from **mk166** or written to the standard output without executing them.

If no target is specified on the command line, **mk166** uses the first target defined in the first makefile.

Long filenames are supported when they are surrounded by double quotes ("). It is also allowed to use spaces in directory names and file names.

Options

–? Show invocation syntax.

–D Display the text of the makefiles as read in.

–DD Display the text of the makefiles and 'mk166.mk'.

–G *dirname*
Change to the directory specified with *dirname* before reading a makefile. This makes it possible to build an application in another directory than the current working directory.

–K Do not remove temporary files.

–S Undo the effect of the **–k** option. Stop processing when a non-zero exit status is returned by a command.

–V Display version information at stderr.

–W *target* Execute as if this target has a modification time of "right now". This is the "What If" option.

–a Always rebuild the target without checking whether it is out of date.

–c Run as child process.

–d Display the reasons why **mk166** chooses to rebuild a target. All dependencies which are newer are displayed.

–dd Display the dependency checks in more detail. Dependencies which are older are displayed as well as newer.

–e Let environment variables override macro definitions from makefiles. Normally, makefile macros override environment variables. Command line macro definitions always override both environment variables and makefile macros definitions.

–err *file* Redirect all error output to the specified *file*.

–f *file* Use the specified file instead of 'makefile'. A **–** as the makefile argument denotes the standard input.

–i Ignore error codes returned by commands. This is equivalent to the special target .IGNORE:.

–k When a nonzero error status is returned by a command, abandon work on the current target, but continue with other branches that do not depend on this target.

–m *file* Read command line information from *file*. If *file* is a '**–**', the information is read from standard input.

–n Perform a dry run. Print commands, but do not execute them. Even lines beginning with an @ are printed. However, if a command line is an invocation of **mk166**, that line is always executed.

–p Normally, if a command in a target rule in a makefile returns an error or when the target construction is interrupted, the make utility removes that target file. With this option you tell the make utility to make all target files precious. This means that all dependency files are never removed.

–q Question mode. **mk166** returns a zero or non-zero status code, depending on whether or not the target file is up to date.

–r Do not read in the default file 'mk166.mk'.

–s Silent mode. Do not print command lines before executing them. This is equivalent to the special target .SILENT:.

–t Touch the target files, bringing them up to date, rather than performing the rules to reconstruct them.

–time Display current date and time.

–w Redirect warnings and errors to standard output. Without, **mk166** and the commands it executes use standard error for this purpose.

macro=*value*
Macro definition. This definition remains fixed for the **mk166** invocation. It overrides any regular definitions for the specified macro within the makefiles and from the environment. It is inherited by subordinate **mk166**'s but act as an environment variable for these. That is, depending on the **–e** setting, it may be overridden by a makefile definition.

Usage

Makefiles

The first makefile read is 'mk166.mk', which is looked for at the following places (in this order):

- in the current working directory
- in the directory pointed to by the HOME environment variable
- in the `etc` directory relative to the directory where **mk166** is located

Example (PC):

when **mk166** is installed in `\c166\bin` the directory `\c166\etc` is searched for makefiles.

Example (UNIX):

when **mk166** is installed in `/usr/local/c166/bin` the directory `/usr/local/c166/etc` is searched for makefiles.

It typically contains predefined macros and implicit rules.

The default name of the makefile is 'makefile' in the current directory. If this file is not found on a UNIX system, the file 'Makefile' is then used as the default. Alternate makefiles can be specified using one or more **–f** options on the command line. Multiple **–f** options act as if all the makefiles were concatenated in a left-to-right order.

The makefile(s) may contain a mixture of comment lines, macro definitions, include lines, and target lines. Lines may be continued across input lines by escaping the NEWLINE with a backslash (\). If a line must end with a backslash then an empty macro should be appended. Anything after a "#" is considered to be a comment, and is stripped from the line, including spaces immediately before the "#". If the "#" is inside a quoted string, it is not treated as a comment. Completely blank lines are ignored.

An *include* line is used to include the text of another makefile. It consists of the word "include" left justified, followed by spaces, and followed by the name of the file that is to be included at this line. Macros in the name of the included file are expanded before the file is included. Include files may be nested.

An *export* line is used for exporting a macro definition to the environment of any command executed by **mk166**. Such a line starts with the word "export", followed by one or more spaces and the name of the macro to be exported. Macros are exported at the moment an export line is read. This implies that references to forward macro definitions are equivalent to undefined macros.

Conditional Processing

Lines containing `ifdef`, `ifndef`, `else` or `endif` are used for conditional processing of the makefile. They are used in the following way:

`ifdef` *macroname*
if-lines
`else`
else-lines
`endif`

The *if-lines* and *else-lines* may contain any number of lines or text of any kind, even other `ifdef`, `ifndef`, `else` and `endif` lines, or no lines at all. The `else` line may be omitted, along with the *else-lines* following it.

First the *macroname* after the **if** command is checked for definition. If the macro is defined then the *if-lines* are interpreted and the *else-lines* are discarded (if present). Otherwise the *if-lines* are discarded; and if there is an **else** line, the *else-lines* are interpreted; but if there is no **else** line, then no lines are interpreted.

When using the **ifndef** line instead of **ifdef**, the macro is tested for not being defined. These conditional lines can be nested up to 6 levels deep.

Macros

Macros have the form 'WORD = text and more text'. The WORD need not be uppercase, but this is an accepted standard. Spaces around the equal sign are not significant. Later lines which contain $(WORD) or ${WORD} will have this replaced by 'text and more text'. If the macro name is a single character, the parentheses are optional. Note that the expansion is done recursively, so the body of a macro may contain other macro invocations. The right side of a macro definition is expanded when the macro is actually used, not at the point of definition.

Example:

```
FOOD = $(EAT) and $(DRINK)
EAT = meat and/or vegetables
DRINK = water
export FOOD
```

'$(FOOD)' becomes 'meat and/or vegetables and water' and the environment variable FOOD is set accordingly by the export line. However, when a macro definition contains a direct reference to the macro being defined then those instances are expanded at the point of definition. This is the only case when the right side of a macro definition is (partially) expanded. For example, the line

```
DRINK = $(DRINK) or wine
```

after the export line affects '$(FOOD)' just as the line

```
DRINK = water or wine
```

would do. However, the environment variable FOOD will only be updated when it is exported again.

You are advised not to use the double quotes (") for long filename support in macros, otherwise this might result in a concatenation of two macros with double quotes (") in between.

Special Macros

MAKE — This normally has the value **mk166**. Any line which invokes MAKE temporarily overrides the **–n** option, just for the duration of the one line. This allows nested invocations of MAKE to be tested with the **–n** option.

MAKEFLAGS — This macro has the set of options provided to **mk166** as its value. If this is set as an environment variable, the set of options is processed before any command line options. This macro may be explicitly passed to nested **mk166**'s, but it is also available to these invocations as an environment variable. The **–f** and **–d** flags are not recorded in this macro.

PRODDIR — This macro expands the name of the directory where **mk166** is installed without the last path component. The resulting directory name will be the root directory of the installed C166/ST10 package, unless **mk166** is installed somewhere else. This macro can be used to refer to files belonging to the product, for example a library source file.

Example:

```
START = $(PRODDIR)/lib/src/start.asm
```

When **mk166** is installed in the directory `/c166/bin` this line expands to:

```
START = /c166/lib/src/start.asm
```

SHELLCMD — This contains the default list of commands which are local to the SHELL. If a rule is an invocation of one of these commands, a SHELL is automatically spawned to handle it.

TMP_CCPROG — This macro contains the name of the control program. If this macro and the TMP_CCOPT macro are set and the command line argument list for the control program exceeds 127 characters then **mk166** will create a temporary file filled with the command line arguments. **mk166** will call the control program with the temporary file as command input file. This macro is only known by the PC version of **mk166**.

TMP_CCOPT

This macro contains the option for the control program which tells the control program to read a file as command arguments. This macro is only known by the PC version of **mk166**.

Example:

```
TMP_CCPROG= cc166
TMP_CCOPT = -f
```

$ This macro translates to a dollar sign. Thus you can use "$$" in the makefile to represent a single "$".

There are several dynamically maintained macros that are useful as abbreviations within rules. It is best not to define them explicitly.

$* The basename of the current target.

$< The name of the current dependency file.

$@ The name of the current target.

$? The names of dependents which are younger than the target.

$! The names of all dependents.

The $< and $* macros are normally used for implicit rules. They may be unreliable when used within explicit target command lines. All macros may be suffixed with F to specify the Filename components (e.g. ${*F}, ${@F}). Likewise, the macros $*, $< and $@ may be suffixed by D to specify the directory component.

The result of the $* macro is always without double quotes (''), regardless of the original target having double quotes ('') around it or not.
The result of using the suffix F (Filename component) or D (Directory component) is also always without double quotes (''), regardless of the original contents having double quotes ('') around it or not.

Functions

A function not only expands but also performs a certain operation. Functions syntactically look like macros but have embedded spaces in the macro name, e.g. '$(match arg1 arg2 arg3)'. All functions are built-in and currently there are five of them: `match`, `separate`, `protect`, `exist` and `nexist`.

The **match** function yields all arguments which match a certain suffix:

```
$(match .obj prog.obj sub.obj mylib.lib)
```

will yield

```
prog.obj sub.obj
```

The **separate** function concatenates its arguments using the first argument as the separator. If the first argument is enclosed in double quotes then '\n' is interpreted as a newline character, '\t' is interpreted as a tab, '*ooo*' is interpreted as an octal value (where, *ooo* is one to three octal digits), and spaces are taken literally. For example:

```
$(separate ",\n" prog.obj sub.obj)
```

will result in

```
prog.obj,
sub.obj
```

Function arguments may be macros or functions themselves. So,

```
$(separate ",\n" $(match .obj $!))
```

will yield all object files the current target depends on, separated by a comma - newline string.

The **protect** function adds one level of quoting. This function has one argument which can contain white space. If the argument contains any white space, single quotes, double quotes, or backslashes, it is enclosed in double quotes. In addition, any double quote or backslash is escaped with a backslash.

Example:

```
echo $(protect I'll show you the "protect" function)
```

will yield

```
echo "I'll show you the \"protect\" function"
```

The **exist** function expands to its second argument if the first argument is an existing file or directory.

Example:

```
$(exist test.c cc166 test.c)
```

When the file `test.c` exists it will yield:

```
cc166 test.c
```

When the file `test.c` does not exist nothing is expanded.

The `nexist` function is the opposite of the exist function. It expands to its second argument if the first argument is not an existing file or directory.

Example:

```
$(nexist test.src cc166 test.c)
```

Targets

A target entry in the makefile has the following format:

```
target ... : [dependency ...] [; rule]
     [rule]
     ...
```

Any line which does not have leading white space (other than macro definitions) is a 'target' line. Target lines consist of one or more filenames (or macros which expand into same) called targets, followed by a colon (:). The ':' is followed by a list of dependent files. The dependency list may be terminated with a semicolon (;) which may be followed by a rule or shell command.

Special allowance is made on MS-DOS for the colons which are needed to specify files on other drives, so for example, the following will work as intended:

```
c:foo.obj : a:foo.c
```

If a target is named in more than one target line, the dependencies are added to form the target's complete dependency list.

The dependents are the ones from which a target is constructed. They in turn may be targets of other dependents. In general, for a particular target file, each of its dependent files is 'made', to make sure that each is up to date with respect to it's dependents.

The modification time of the target is compared to the modification times of each dependent file. If the target is older, one or more of the dependents have changed, so the target must be constructed. Of course, this checking is done recursively, so that all dependents of dependents of dependents of ... are up-to-date.

To reconstruct a target, **mk166** expands macros and functions, strips off initial white space, and either executes the rules directly, or passes each to a shell or COMMAND.COM for execution.

For target lines, macros and functions are expanded on input. All other lines have expansion delayed until absolutely required (i.e. macros and functions in rules are dynamic).

Special Targets

.DEFAULT: If you call the make utility with a target that has no definition in the make file, this target is built.

.DONE: When the make utility has finished building the specified targets, it continues with the rules following this target.

.IGNORE: Non-zero error codes returned from commands are ignored. Encountering this in a makefile is the same as specifying the option **-i** on the command line.

.INIT: The rules following this target are executed before any other targets are built.

.SILENT: Commands are not echoed before executing them. Encountering this in a makefile is the same as specifying the option **-s** on the command line.

.SUFFIXES: This target specifies a list of file extensions. Instead of building a completely specified target, you now can build a target that has a certain file extension. Implicit rules to build files with a number of extensions are included in the system makefile `mk166.mk`.

If you specify this target with dependencies, these are added to the existing `.SUFFIXES` target in `mk166.mk`. If you specify this target without dependencies, the existing list is cleared.

.PRECIOUS: Dependency files mentioned for this target are never removed. Normally, if a command in a rule returns an error or when the target construction is interrupted, the make utility removes that target file. You can use the **-p** command line option to make all target files precious.

Rules

A line in a makefile that starts with a TAB or SPACE is a shell line or rule. This line is associated with the most recently preceding dependency line. A sequence of these may be associated with a single dependency line. When a target is out of date with respect to a dependent, the sequence of commands is executed. Shell lines may have any combination of the following characters to the left of the command:

@ will not echo the command line, except if **-n** is used.

- **mk166** will ignore the exit code of the command, i.e. the ERRORLEVEL of MS-DOS. Without this, **mk166** terminates when a non-zero exit code is returned.

+ **mk166** will use a shell or COMMAND.COM to execute the command.

If the '+' is not attached to a shell line, but the command is a DOS command or if redirection is used (<, |, >), the shell line is passed to COMMAND.COM anyway. For UNIX, redirection, backquote (‘) parentheses and variables force the use of a shell.

You can force **mk166** to execute multiple command lines in one shell environment. This is accomplished with the token combination ';\'.

Example:

```
cd c:\c166\bin ;\
c166 -V
```

The ';' must always directly be followed by the '\' token. Whitespace is not removed when it is at the end of the previous command line or when it is in front of the next command line. The use of the ';' as an operator for a command (like a semicolon ';' separated list with each item on one line) and the '\' as a layout tool is not supported, unless they are separated with whitespace.

mk166 can generate inline temporary files. If a line contains '<<WORD' then all subsequent lines up to a line starting with WORD, are placed in a temporary file. Next, '<<WORD' is replaced with the name of the temporary file.

No whitespace is allowed between '<<' and 'WORD'.

Example:

```
l166 @<<EOF
     $(separate ",\n" $(match .obj $!)),
     $(separate ",\n" $(match .lib $!))
     to $@
     $(LDFLAGS)
EOF
```

The four lines between the tags (EOF) are written to a temporary file (e.g. "\tmp\mk2"), and the command line is rewritten as "l166 @\tmp\mk2".

Implicit Rules

Implicit rules are intimately tied to the .SUFFIXES: special target. Each entry in the .SUFFIXES: list defines an extension to a filename which may be used to build another file. The implicit rules then define how to actually build one file from another. These files are related, in that they must share a common basename, but have different extensions.

If a file that is being made does not have an explicit target line, an implicit rule is looked for. Each entry in the .SUFFIXES: list is combined with the extension of the target, to get the name of an implicit target. If this target exists, it gives the rules used to transform a file with the dependent extension to the target file. Any dependents of the implicit target are ignored.

If a file that is being made has an explicit target, but no rules, a similar search is made for implicit rules. Each entry in the .SUFFIXES: list is combined with the extension of the target, to get the name of an implicit target. If such a target exists, then the list of dependents is searched for a file with the correct extension, and the implicit rules are invoked to create the target.

Examples

This makefile says that `prog.out` depends on two files `prog.obj` and `sub.obj`, and that they in turn depend on their corresponding source files (`prog.c` and `sub.c`) along with the common file `inc.h`.

```
LIB  =    ext\c166s.lib

prog.out: prog.obj sub.obj
     l166 loc prog.obj sub.obj $(LIB) to prog.out

prog.obj: prog.c inc.h
     c166 prog.c
     a166 prog.src NOPRINT

sub.obj:  sub.c inc.h
     c166 sub.c
     a166 sub.src NOPRINT
```

The following makefile uses implicit rules (from `mk166.mk`) to perform the same job. Note that the implicit rules use the control program **cc166**.

```
prog.out: prog.obj sub.obj
prog.obj: prog.c inc.h
sub.obj:  sub.c inc.h
```

Files

makefile	Description of dependencies and rules.
Makefile	Alternative to makefile, for UNIX.
mk166.mk	Default dependencies and rules.

Diagnostics

mk166 returns an exit status of 1 when it halts as a result of an error. Otherwise it returns an exit status of 0.

10.10 SREC166

Name

srec166 format object code (absolute located TASKING `a.out`) into Motorola S format

Synopsis

srec166 [**-l***count*] [**-z**] [**-w**] [**-s***sectlist*] [**-c***address*] [**-r1**] [**-r2**] [**-r3**] [**-a***address*] [**-n**] [**-nh**] [**-nt**] [**-p***offset* [**-e***hex*]] [*infile*][[**-o**] *outfile*]
srec166 -V
srec166 -? (UNIX C-shell: **"-?"** or **-\?**)
srec166 -f *invocation_file*

Description

srec166 formats object files and executable files to Motorola S format records for (E)PROM programmers. Hexadecimal numbers A to F are always generated as capitals.

Empty sections in the input file are skipped. No empty records are generated for empty sections.

The program can format records to Motorola S1 S2 and S3 format.

Addresses that lie between sections are not filled in.

The *output* does not contain symbol information.

There is no need to place the input and output file names at the end of the command line. If data is to be read from standard input and the output is not standard output, the output file must be specified with the **-o** option.

If only one filename is given, it is assumed that it is the name of the input file, hence output is written to standard output.

It is also possible to omit both the input filename and output filename. In that case standard input and standard output are used.

Options

Options must be separated by a blank and start with a minus sign (-). Decimal and hexadecimal arguments should be concatenated directly to the option letter.

Options may be specified in any order.

Output filenames should be separated from the **-o** option letter by a blank.

Example:

```
srec166 myfile.out -l20 -z outfile.hex
```

The next example gives the same result:

```
srec166 -l20 -z -o outfile.hex < myfile.out
```

-? Display an explanation of options at stdout.

-V Display version information at stderr.

-a*address* *address* specifies the address that is to be added to the address of any data record.

-c*address* This option specifies the start address which is loaded into the processor. The start address is placed in the termination record.

-e*hex* *hex* is the length of the data output (must be used in combination with **-p** option). The user must have a clear view of the sizes and base addresses of the sections when he uses the **-p** and **-e** options.

Example:

```
srec166 -p10 -eD0 myfil.out -r2
```

skips 16 bytes in the first section and output the following 208 bytes of the file myfil.out in S2 format records to the standard output.

-f *invoc_file* Specify an invocation file. An invocation file can contain all options and file specification that can be specified on the command line. A combination of an invocation file and command line options is possible too.

-l*count* Number of character pairs in the output record. The number of characters in a line is given by count * 2 + 4. The default count is 32.

-n Suppress header (S0), and termination records (S7, S8 or S9).

-nh No output of header record.

–nt No output of termination record.

–o *outfile* *outfile* is the name of the file to which output is written. This option must be used if the input is standard input and the output must be written in a file.

–p*offset* *offset* is the offset in a section at which the output must start. If no section number is specified with the **–s** option, then bytes are skipped in the first record found. The user should be aware of the fact that there is no detection of skipping an entire section in a file. The **–p** option may not occur more than once in a command line. Warning: sections are adjacent in the input file, but do not have to be contiguous in memory!

–r1 Output of Motorola S1 data records, for 16 bits addresses. This is the default record type.

–r2 Output of Motorola S2 records, for 24 bits addresses.

–r3 Output of Motorola S3 records, for 32 bits addresses.

–s*sectlist* *sectlist* is a list of section numbers that must be written to output. The section numbers must be separated by commas. Note: section numbers start at 0 and can be found with the **dmp166** utility.

–w Select word address count instead of byte address count.

–z Do not output records with zeros (0x00) only.

APPENDIX A

A.OUT FILE FORMAT

TASKING

APPENDIX

1 INTRODUCTION

The layout of the assembler/linker/locator output file is machine independent (through being fully byte oriented), compact and accepts variable-length symbols. All **chars** are 1 byte, **shorts** are 2 bytes and **longs** are 4 bytes.

The elements of an `a.out` file describe the sections in the file and the symbol debug information. These elements include:

- File Header record (tk_outhead)
- Section Header records (outsect)
- Raw data for each section with initialized data
- Relocation records (outrelo)
- Name records (tk_outname)
- Identifier strings
- Extension Header record (exthead)
- Extension records:
  - Segment Range records (tk_extsegm)
  - Allocation records (tk_extallo)

The names between parentheses refer to the corresponding structures in the C include file `out.h`, which is included at the end of this appendix.

The locate stage of **l166** produces absolute object files. These files do not contain relocation records. The following figure illustrates the layout of an `a.out` file:

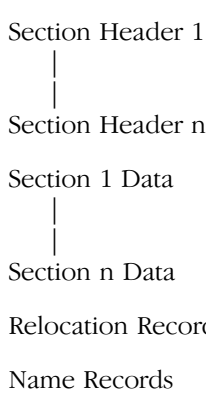

Identifier Strings

Extension Header

Segment Range Records

Allocation Records

1.1 FILE HEADER

The file header occupies the first 22 bytes of the file and comprises:

oh_magic An **unsigned short** containing the 'magic' number specifying the type of file (assembler/linker/locator output file).

For C166 object files **oh_magic** must have the following values:

```
0x201 (O_MAGIC)  for locator output
0x202 (N_MAGIC)  for assembler/linker output
```

oh_stamp An **unsigned short** containing the version stamp (the assembler/linker/locator release version). The upper 8 bits of the stamp field contain a code specifying the target processor. These codes are defined in the `out.h` file, which is listed at the end of this appendix.

For C166 object files this field must be:

```
O_NSTAMP | (TARGET_166 << 8 )
```

oh_flags An **unsigned short** specifying the following format flags used for the C166:

HF_LINK If bit 2 of **oh_flags** is '1' then one or more references remain unresolved; otherwise all references have been resolved.

oh_nsect An **unsigned short** containing the number of output section fillers.

oh_nrelo An **unsigned short** containing the number of relocation records.

oh_nname An **unsigned short** containing the number of symbol records.

oh_nemit A **long** containing the sum of the sizes of all sections in the file.

oh_nchar A **long** containing the size of the symbol string area.

oh_nsegm An **unsigned short** containing two values:

- an extra byte for the number of relocation records (**oh_nrelo**)
- an extra byte for the number of name records (**oh_nname**)

These bytes are used for large number of symbols and relocation records. The macros **oh_nrelo** and **oh_nname** can be used to get a long integer value for these numbers.

File header layout:

```
byte      type              description
number

0-1       unsigned short    oh_magic: magic number
2-3       unsigned short    oh_stamp: version stamp
4-5       unsigned short    oh_flags: flag field
6-7       unsigned short    oh_nsect: number of sections
8-9       unsigned short    oh_nrelo: number of relocation records
10-11     unsigned short    oh_nname: number of name records
12-15     long              oh_nemit: number of bytes initialized
                                      data in the file
16-19     long              oh_nchar: size of string area
20-21     unsigned short    oh_nsegm: additional high bytes of
                                      number of relocation records
                                      and symbol records
```

1.2 SECTION HEADERS

The section header records comprise a separate header for each output section; each section header record occupies 20 bytes and comprises the following:

os_base A **long** containing the start address of the section in the machine.

os_size A **long** containing the size of the section in the machine.

os_foff A **long** containing the start address of the section in the file.

os_flen A **long** containing the size of the section in the file.

os_lign A **long** containing the alignment of the section. (Not used for C166).

1.3 SECTION FILLERS

The section contents follow on from the section headers and comprise the contents of each output section, in the same order as the section headers. The contents start at the address specified by **os_base** and are of the length specified by **os_size**. The initialized portion of the section is of the length specified by **os_flen**. An uninitialized portion of the contents comprising **os_size – os_flen** bytes is left at the end of the contents. There are no restrictions on section boundaries so sections may overlap.

1.4 RELOCATION RECORDS

Relocation records comprise an 8-byte entry for each occurrence of a relocatable value; the entries have the following structure:

or_type An **unsigned short** containing the type of reference.

or_sect An **unsigned short** containing the number of the referencing section. If **or_sect** is zero, the relocation record is a symbol table relocation record rather than a code relocation record.

or_addr A **long** containing the address where relocation is to take place. If the current relocation record is a symbol table relocation record, **or_addr** contains the index of the symbol to be relocated.

or_nami An **unsigned short** containing the number of bytes that follows the relocation record.

Expression records

For avoiding problems with for example sign extension with the relocation of symbols it should be possible to pass an expression from the assembler to the linker. This feature is added to `a.out`, which also introduces an interesting extension to expression usage with relocatables. The extension on `a.out` makes it possible to use relocatables in any expression.

The relocation record is described above.

The **or_nami** field of the record is used to indicate the number of bytes that is following the relocation record. These bytes form **expression records**:

An **expression record** consists of one type byte and optional arguments. The type bytes are grouped as follows:

```
0x00 - 0x1f    predefined operators     no arguments
0x20 - 0xef    user defined operators   no arguments
0xf0 - 0xff    special types            argument(s)
```

For a definition of the operators and special types see the file `out.h` at the end of this appendix. After the last byte of the expression a new relocation record can be started.

The total length of all the relocation records is a multiple of one relocation record. This can mean that after the last record, some extra bytes are emitted until the record boundary is reached. The **oh_nrelo** field in the file header record contains the number of fixed length relocation records which fits in the number of bytes used for the relocation records. In this case all tools reading `a.out` (like **dmp166**) still can find the name and extension records, wich are placed after the relocation records in the object.

1.5 NAME RECORDS

The name records comprise a variable length entry for each symbol. Each entry consists of a record and an associated identifier (string); the record and the identifier are held separately to allow variable length identifiers. The records comprise the following:

on_u A **union** which can contain (at different times) either a **char pointer** (**on_ptr**) or a **long** (**on_off**). **on_ptr** is the symbol name when the file is loaded into memory for execution and **on_off** is the offset in the file to the first character of the identifier.

on_type An **unsigned short** which describes the symbol as follows:

S_TYP This comprises the least significant 7 bits of **on_type** which have the following significance:

If all bits are '0' the symbol is undefined (**S_UND**).

If bit 0 is '1' and bits 1 to 6 are all '0' the symbol is absolute (**S_ABS**).

If bit 1 is '1' and bits 0 and 2 to 6 are all '0' the symbol is a section number in an extra field (**S_SEC**). The symbol is relative. In the `a.out` file format a separate field is used. The number of bits are not enough to hold all possible section numbers.

The section mask **S_SECT** (0x0003) must be used for testing the types mentioned above (S_UND, S_ABS and S_SEC).

For the C166 symbol types are added. Symbol types are masked by **S_STYP** (0x003C).
The following symbol types are added:

Symbol type	Value	Description
S_CLS	0x0004	CLASS - class name
S_GRP	0x0008	GROUP - group name
S_BYTE	0x000C	BYTE - 8 bit variable
S_WORD	0x0010	WORD - 16 bit variable
S_BIT	0x0014	BIT - 1 bit variable
S_BTW	0x0018	BITWORD - bitword label
S_FAR	0x001C	FAR - far label
S_NEAR	0x0020	NEAR - near label
S_TSK	0x0024	TASKNAME - task name
S_REG	0x0028	REGBANK - register bank name
S_INT	0x002C	INTNO - symbolic interrupt number
S_DT16	0x0030	DATA16 - 16 bit constant
S_DT8	0x0034	DATA8 - 8 bit constant
S_DT4	0x0038	DATA4 - 4 bit constant
S_DT3	0x003C	DATA3 - 3 bit constant

S_PUB If bit 6 of **on_type** is '1' the symbol is associated with a public symbol.

S_EXT If bit 7 of **on_type** is '1' the symbol is external; otherwise it is local.

S_EXT | S_PUB If both bit 6 and bit 7 of **on_type** are '1', the symbol is associated with a global symbol.

S_ETC Bits 8–15 are the type specification for the symbol table information.

on_desc An **unsigned short** containing the debug information.

on_valu A **long** containing the symbol value.

on_sect An **unsigned short** containing the number of the relocatable section the symbol belongs to.

In order to permit several symbolic debug features, all symbol entries are in the order of their definition. The section symbols occupy the last entries in the symbol table for the purpose of quick reference.

For the C166 a task name record (S_TSK) is placed at the beginning of each task in the symbol table.

1.6 EXTENSION RECORDS

The way the link information is passed from the assembler to the linker is through *extension records* at the end of the `out.h` format. Within the framework of these extension records we can describe all the extra information required.

The extension records only occur in object files. Extension records consist of:

- an extension header
- range specification records
- allocation specification records.

Extension Header

The extension header consists of 8 bytes and consist of:

eh_magic An **unsigned short** containing the 'magic' number specifying the type of file (assembler/linker/locator output file).

```
O_MAGIC (0x201) specifies an assembler/
                linker output file.
N_MAGIC (0x202) specifies a locator
                output file.
```

eh_stamp An **unsigned short** containing the version stamp (the assembler/linker release version). This value is 0 for the166.

eh_nsegm An **unsigned short** containing the number of range specification records.

eh_allo An **unsigned short** containing the number of allocation records.

Segment Range Specification Records

The segment range allocation records specify the lower bound and upper bound of a particular memory range. For the C166 section range records are used to pass additional information to the linker/locator.

es_type An **unsigned short** containing section type information.

S_TYP For the 166 these bits can have the following value:

S_UND with a value of 0x0000 : undefined item

For other processors these bits are meaningless.

S_ETC Bits 8-15 are the type specification bits. Currently used values are:

S_RNG with a value of 0x7100 : range record.

S_USE with a value of 0x7600 : extension record.

es_desc An **unsigned short**, currently not used, but it can be used for future debugging extensions.

es_lval A **long** containing the lower bound value of the memory range.

es_uval A **long** containing the upper bound value of the memory range.

es_sect An **unsigned short** containing the segment type information.

Allocation Specification Records

For the C166 these records are used to pass additional information about group/class numbers in a section.

ea_type An **unsigned short** containing segment type information. Types are:

- **S_TYP** Normally these bits are meaningless. For the C166, the following value exists:
  - **S_SEC** with the value 0x0002 : section number
- **S_ETC** Bits 8-15 are the type specification bits. Currently used value for the C166 is:
  - **S_SCT** with the value 0x0100 specifies a section type record.

ea_desc An **unsigned short**, currently not used, but it can be used for future debugging extensions.

ea_valu A **long** containing the page size or the base address. When the allocation record is a section type record, this value contains the group and class number in a section.

ea_sect An **unsigned short** containing the segment type information. Contains the section number if the allocation record is a section type record.

2 FORMAT OF A.OUT FILE AS C INCLUDE FILE

The format of the `a.out` file is contained within the C include file `out.h` where it is described in the following terms:

```
/*****************************************************************
 *
 * VERSION        :     @(#)out.h   1.9   98/07/03
 *
 * DESCRIPTION    :     out.h - Object format for C166 toolchain
 *
 *****************************************************************/

#ifndef __OUT_H_DEFINED
#define __OUT_H_DEFINED

#ifndef _UTYPES_DEFINED
#define _UTYPES_DEFINED
typedef unsigned char   Uchar;
typedef unsigned short  Ushort;
typedef unsigned long   Ulong;
#endif

struct outhead {
      Ushort   oh_magic;      /* magic number */
      Ushort   oh_stamp;      /* version stamp */
      Ushort   oh_flags;      /* several format flags */
      Uchar    oh_nsect;      /* number of outsect structures */
      Uchar    oh_nsegm;      /* number of segments used */
      Ushort   oh_nrelo;      /* number of outrelo structures */
      Ushort   oh_nname;      /* number of outname structures */
      long     oh_nemit;      /* sum of all os_flen */
      long     oh_nchar;      /* size of string area */
};

struct tk_outhead {
      Ushort   oh_magic;      /* magic number */
      Ushort   oh_stamp;      /* version stamp */
      Ushort   oh_flags;      /* several format flags */
      Ushort   oh_nsect;      /* number of outsect structures */
      Ushort   oh_nrelo;      /* number of outrelo structures */
      Ushort   oh_nname;      /* number of outname structures */
      long     oh_nemit;      /* sum of all os_flen */
      long     oh_nchar;      /* size of string area */
      Ushort   oh_nsegm;      /* MSB for number of outname
                                 and outrelo structures */
};

union ohdr {
      struct   outhead        ohd;
      struct   tk_outhead     tk_ohd;
      };
```

```
/*
 * magic word definitions
 */
#define  MAGIC_TCP      0x0200   /* TCP assembler & linker */
#define  MAGIC_INTEL    0x0400   /* Intel compatible assembler &
                                    linker */

#define  MAGIC_O        0x0001   /* magic number for target load
file */
#define  MAGIC_N        0x0002   /* magic number for object file */
#define  MAGIC_MASK     (~(MAGIC_TCP|MAGIC_INTEL))

#define  O_MAGIC        (MAGIC_O|MAGIC_TCP)
#define  N_MAGIC        (MAGIC_N|MAGIC_TCP)
#define  O_I_MAGIC      (MAGIC_O|MAGIC_INTEL)
#define  N_I_MAGIC      (MAGIC_N|MAGIC_INTEL)

/*
 * Macros for getting or setting the total number of relo records
   or the total number of
 * name records.
 */
#define GET_NNAME(n)    ((long)(n).oh_nname |
                         (((long)(n).oh_nsegm & 0x00FFL) << 16))
#define GET_NRELO(n)    ((long)(n).oh_nrelo |
                         (((long)(n).oh_nsegm & 0xFF00L) << 8))
#define SET_NNAME(n,v)  (n).oh_nname = (Ushort)(v);
                         (n).oh_nsegm=((n).oh_nsegm & 0xFF00)  |
                         (Ushort)((v)>>16 & 0x00FF)
#define SET_NRELO(n,v)  (n).oh_nrelo = (Ushort)(v);
                         (n).oh_nsegm=((n).oh_nsegm & 0x00FF)  |
                         (Ushort)((v)>>8 & 0xFF00)

/*
 * version stamp
 * target code in the upper 8 bits
 */
#define  O_STAMP    1 /* version stamp */
#define  O_NSTAMP   2 /* version stamp for new Intel comp. output */
#define  O_VSTAMP   4 /* Version stamp for extended sections */

#define  TARGET_8051       1
#define  TARGET_8096       2
#define  TARGET_68000      3
#define  TARGET_Z80        4
#define  TARGET_TMS320     5
#define  TARGET_80166      6

#define  HF_BREV  0x0001   /* high order byte lowest address */
#define  HF_WREV  0x0002   /* high order word lowest address */
#define  HF_LINK  0x0004   /* unresolved references left */
#define  HF_8086  0x0008   /* os_base specially encoded */
```

```
struct outsect {
      long     os_base;    /* startaddress in machine */
      long     os_size;    /* section size in machine */
      long     os_foff;    /* startaddress in file */
      long     os_flen;    /* section size in file */
      long     os_lign;    /* section alignment */
};

struct outrelo {
      Ushort   or_type;    /* type of reference */
      Ushort   or_sect;    /* referencing section */
      long     or_addr;    /* referencing address */
      Ushort   or_nami;    /* referenced symbol index or */
                           /* expression bye count */
};

/*
 * relocation type bits
 *
 * +-------------------------------------------+
 * | size | pos | pc rel | mach dep | extra info |
 * +-------------------------------------------+
 *  0      2     4        5          7
 *
 * size        : size of relocatable item (2 bits)
 * pos         : position of relocatable item
                 in original relocated value (2 bits)
 * pc rel      : pc relative indication (1 bit)
 * mach dep    : reserved for machine dependent purposes (2 bits)
 * extra info  : to add information to one of the other
                 relocation types
 */

/* sizes (bit 0/1 values) */
#define  RELO1    0x00  /* 1 byte */
#define  RELO2    0x01  /* 2 bytes */
#define  RELO4    0x02  /* 4 bytes */
#define  RELSS    0x03  /* special size (machine dependent) */

/* positions (bit 2/3 values) */
#define  RELP0    0x00  /* no byte selection */
#define  RELP1    0x04  /* least significant byte/word
                          * (byte 0, word 0)
                          */

#define  RELP2    0x08  /* byte 1, word 0 */
#define  RELPS    0x0C  /* special byte (machine dependent) */

/* pc relative mode (bit 4 value) */
#define  RELPC    0x10  /* pc relative */
```

```
/* machine dependent cases (bit 5/6 values) */
#define  RELM0    0x00  /* no machine dependent case */
#define  RELM1    0x20  /* machine dependent case 1 */
#define  RELM2    0x40  /* machine dependent case 2 */
#define  RELM3    0x60  /* machine dependent case 3 */

/* all relocation types above can have one extra flag: */
#define  RELXI    0x80  /* extra information bit */

/* definition of tokens for general operators (0x00 - 0x1f) */
#define  XO_ADD   0x00  /* +  */
#define  XO_SUB   0x01  /* -  */
#define  XO_MUL   0x02  /* *  */
#define  XO_DIV   0x03  /* /  */
#define  XO_MOD   0x04  /* %  */
#define  XO_ORB   0x05  /* |  */
#define  XO_ANDB  0x06  /* &  */
#define  XO_XOR   0x07  /* ^  */
#define  XO_SR    0x08  /* >> */
#define  XO_SL    0x09  /* << */
#define  XO_NEGB  0x0a  /* ~  */
#define  XO_GT    0x0b  /* >  */
#define  XO_LT    0x0c  /* <  */
#define  XO_GTE   0x0d  /* >= */
#define  XO_LTE   0x0e  /* <= */
#define  XO_EQ    0x0f  /* == */
#define  XO_NE    0x10  /* != */
#define  XO_AND   0x11  /* && */
#define  XO_OR    0x12  /* || */
#define  XO_NOT   0x13  /* !  */
#define  XO_NEG   0x14  /* unary - */

/* definition of tokens for proccessor dependent operators (0x20 -
   0xef) */
/* C166 operators */
#define  XO_POF   0x20  /* POF - page offset */
#define  XO_PAG   0x21  /* PAG - page number */
#define  XO_SOF   0x22  /* SOF - segment offset */
#define  XO_SEG   0x23  /* SEG - segment number */
#define  XO_BOF   0x24  /* BOF - bit offset */
#define  XO_HIGH  0x25  /* HIGH - high byte */
#define  XO_LOW   0x26  /* LOW - low byte */
#define  XO_DOT   0x27  /* . - bit address: off.pos */
#define  XO_ULT   0x28  /* ULT - unsigned less than */
#define  XO_ULE   0x29  /* ULE - unsigned less than or equal */
#define  XO_UGT   0x2a  /* UGT - unsigned greater than */
#define  XO_UGE   0x2b  /* UGT - unsigned greater than or equal*/

/* special operators 0xf0 - 0xff */
#define  XO_NUM   0xf0  /* 4 byte constant is following */
#define  XO_NAM   0xf1  /* 3 byte symbol name index is following */
#define  XO_NAMO  0xf2  /* 3 byte symbol name index and 4 byte
                           offset */
```

```
struct outname {
      union {
            char  *on_ptr;    /* symbol name (in core) */
            long  on_off;     /* symbol name (in file) */
      } on_u;
      Ushort      on_type;    /* symbol type */
      Ushort      on_desc;    /* debug info */
      long        on_valu;    /* symbol value */
};

struct tk_outname {
      union {
            char  *on_ptr;    /* symbol name (in core) */
            long  on_off;     /* symbol name (in file) */
      } on_u;
      Ushort      on_type;    /* symbol type */
      Ushort      on_desc;    /* debug info */
      long        on_valu;    /* symbol value */
      Ushort      on_sect;    /* section number of the symbol */
};

union nam   {
      struct      outname     onm;
      struct      tk_outname  tk_onm;
      };

#define  on_mptr  on_u.on_ptr
#define  on_foff  on_u.on_off

/*
 * section type bits and fields
 */
#define  S_TYP    0x003F   /* undefined, absolute or relative */
#define  S_COM    0x0040   /* .comm symbol (TCP) */
#define  S_PUB    0x0040   /* public symbol (Intel) */
#define  S_EXT    0x0080   /* external flag */
#define  S_ETC    0x7F00   /* for symbolic debug, bypassing 'as' */

/*
 * S_TYP field values
 */
#define  S_UND       0x0000   /* undefined item */
#define  S_ABS       0x0001   /* absolute item */
#define  S_MIN       0x0002   /* first user section */
#define  S_MAX       S_TYP    /* last user section */
#define  S_SEC       0x0002   /* section number in extra field */
#define  TKS_MAX     256      /* maximum number of segments in
                                 extended object format */
```

```
#define  TKS_OSMAX   5000
         /* Maximum number of segments in extended a.out format */
         /* This value is used by linker/locator and should not be
            changed */
         /* Tools reading a.out format should support at least */
         /* this number of segments in the output format */

/*
 * S_ETC field values
 */
#define  S_SCT    0x0100   /* section names */
#define  S_LIN    0x0200   /* hll source line item */
#define  S_FIL    0x0300   /* hll source file item */
#define  S_MOD    0x0400   /* ass source file item */

#define  S_SEG    0x7000   /* segment names */
#define  S_RNG    0x7100   /* range descriptor */
#define  S_BAS    0x7200   /* base descriptor */
#define  S_PAG    0x7300   /* page descriptor */
#define  S_INP    0x7400   /* page descriptor */
#define  S_USE    0x7600   /* extension record identification */
#define  S_VER    0x7F00   /* compiler phase identification */

/* C166 symbol types masked by 0x3C */
#define  S_STYP   0x003C   /* mask for symbol types */
#define  S_SECT   0x0003   /* mask for section type */
#define  S_CLS    0x0004   /* CLASS - class name */
#define  S_GRP    0x0008   /* GROUP - group name */
#define  S_BYTE   0x000C   /* BYTE - 8 bit variable */
#define  S_WORD   0x0010   /* WORD - 16 bit variable */
#define  S_BIT    0x0014   /* BIT - 1 bit variable */
#define  S_BTW    0x0018   /* BITWORD - bitword label */
#define  S_FAR    0x001C   /* FAR - far label */
#define  S_NEAR   0x0020   /* NEAR - near label */
#define  S_TSK    0x0024   /* TASKNAME - task name */
#define  S_REG    0x0028   /* REGBANK - register bank name */

#define  S_INT    0x002C   /* INTNO - symbolic interrupt number */
#define  S_DT16   0x0030   /* DATA16 - 16 bit constant */
#define  S_DT8    0x0034   /* DATA8 - 8 bit constant */
#define  S_DT4    0x0038   /* DATA4 - 4 bit constant */
#define  S_DT3    0x003C   /* DATA3 - 3 bit constant */
```

```
/*
 * Allocation information is generated in a
 * S_SEG record. the value field contains the attributes
 * SA_PAG, SA_INP, SA_BTA, SA_UNT and SA_BLK.
 * An S_USE record contains the attributes
 * SA_OV0, SA_OV1, SA_OV2 and SA_OV3.
 */
#define  SA_PAG   0x0001   /* page boundary attribute */
#define  SA_INP   0x0002   /* inpage attribute */
#define  SA_BTA   0x0004   /* bitaddressable attribute */
#define  SA_UNT   0x0008   /* unit attribute */
#define  SA_BLK   0x0010   /* inblock attribute */
#define  SA_SHT   0x1000   /* short attribute */
#define  SA_ROM   0x2000   /* romdata attribute */
#define  SA_ATT   (SA_PAG|SA_INP|SA_BTA|SA_UNT|SA_BLK|SA_SHT|SA_ROM
)

#define  SA_ASG   0x0020   /* absolute    allocation */
#define  SA_RSG   0x0040   /* relative    allocation */
#define  SA_MASK  0x007f   /* allocation type mask */

#define  SA_OV0   0x0100   /* overlay bank 0 attribute */
#define  SA_OV1   0x0200   /* overlay bank 1 attribute */
#define  SA_OV2   0x0400   /* overlay bank 2 attribute */
#define  SA_OV3   0x0800   /* overlay bank 3 attribute */
#define  SA_OVX   (SA_OV0|SA_OV1|SA_OV2|SA_OV3)

/* C166 */
#define  SA_WOR   0x0000   /* word alignment (default) */
#define  SA_BYT   0x0002   /* byte alignment */
#define  SA_SEG   0x0003   /* segment alignmemt */
#define  SA_PCA   0x0005   /* PEC-addressable - word alignment */
#define  SA_DBW   0x0006   /* double word alignment */
#define  SA_IRA   0x0007   /* IRAM addressable - word alignment */
#define  SA_PRV   0x0000   /* private section (default) */
#define  SA_PUB   0x0010   /* public section */
#define  SA_COM   0x0030   /* common section */
#define  SA_SSK   0x0040   /* system stack section */
#define  SA_USK   0x0050   /* user stack section */
#define  SA_GLB   0x0060   /* global section */
#define  SA_GUS   0x0070   /* global user stack section */
```

```
/*
 * memory type definitions
 * used in symbol table (i_mtyp)
 * used in expression evaluation (mtyp)
 * used in allocation record S_SEG
 */

#define  MEM_UNDEF   0x00     /* memory type undefined */
#define  MEM_CODE    0x78     /* memory type code */
#define  MEM_BIT     0x79     /* memory type bit */
#define  MEM_DATA    0x7a     /* memory type data */
#define  MEM_XDATA   0x7b     /* memory type xdata */
#define  MEM_HDAT    0x7b     /* memory type HDAT */
#define  MEM_IDATA   0x7c     /* memory type idata */
#define  MEM_PDAT    0x7c     /* memory type PDAT */
#define  MEM_NBR     0x7d     /* memory type number */
#define  MEM_LDAT    0x7d     /* memory type LDAT */
#define  MEM_DBI     0x7e     /* memory type data bitaddressable
                               * internal use only
                               */
#define  MEM_SDAT    0x7f     /* memory type SDAT */

/*
 * Extension records only occur in object files. Thus there
 * exists an extension header if IS_OBJECT(outhead). (see below).
 *
 * extension header */
struct exthead {
      Ushort   eh_magic;      /* magic number */
      Ushort   eh_stamp;      /* version stamp */
      Ushort   eh_nsegm;      /* number of extsegm structures */
      Ushort   eh_nallo;      /* number of extallo structures */
};

#define  E_MAGIC     N_MAGIC  /* magic number for object file */
#define  E_STAMP     0        /* version stamp */

/*
 * segment range specifications
 */
struct extsegm {
      Ushort   es_type;       /* symbol type */
      Ushort   es_desc;       /* debug info */
      long     es_lval;       /* lower bound value */
      long     es_uval;       /* upper bound value */
};

struct tk_extsegm {
      Ushort   es_type;       /* symbol type */
      Ushort   es_desc;       /* debug info */
      long     es_lval;       /* lower bound value */
      long     es_uval;       /* upper bound value */
      Ushort   es_sect;       /* section reference */
};
```

```
union eseg {
      struct   extsegm        esg;
      struct   tk_extsegm     tk_esg;
      };

/*
 * section base and paging specifications
 */
struct extallo {
      Ushort   ea_type;       /* symbol type */
      Ushort   ea_desc;       /* debug info */
      long     ea_valu;       /* base or page value */
};

struct tk_extallo {
      Ushort   ea_type;       /* symbol type */
      Ushort   ea_desc;       /* debug info */
      long     ea_valu;       /* base or page value */
      Ushort   ea_sect;       /* section reference */
};

union eall  {
      struct   extallo        eal;
      struct   tk_extallo     tk_eal;
};

/*
 * structure format strings
 */
#define  SF_HEAD              "222112244"
#define  SF_SECT              "44444"
#define  SF_RELO              "1124"
#define  SF_NAME              "4224"
#define  SF_EXTH              "2222"
#define  SF_SEGM              "2244"
#define  SF_ALLO              "224"

#define  SF_TKHEAD            "222222442"
#define  SF_TKSECT            "44444"
#define  SF_TKRELO            "2242"
#define  SF_TKNAME            "42242"
#define  SF_TKEXTH            "2222"
#define  SF_TKSEGM            "22442"
#define  SF_TKALLO            "2242"
```

```
/*
 * structure sizes (bytes in file; add digits in SF_*)
 */
#define  SZ_HEAD              20
#define  SZ_SECT              20
#define  SZ_RELO              8
#define  SZ_NAME              12
#define  SZ_EXTH              8
#define  SZ_SEGM              12
#define  SZ_ALLO              8

#define  SZ_TKHEAD            22
#define  SZ_TKSECT            20
#define  SZ_TKRELO            10
#define  SZ_TKNAME            14
#define  SZ_TKEXTH            8
#define  SZ_TKSEGM            14
#define  SZ_TKALLO            10

/*
 * file access macros
 */
#define IS_BINARY(x) (((x).oh_magic & MAGIC_MASK) == MAGIC_O)
#define IS_OBJECT(x) (((x).oh_magic & MAGIC_MASK) == MAGIC_N)
#define BADMAGIC(x)  (!(IS_BINARY(x) || IS_OBJECT(x)))
#define BADEMAGIC(x) ((x).eh_magic!=E_MAGIC)
#define IS_NEWHD(x)  (((x).oh_stamp & 0x00FF ) == O_VSTAMP )

#define OFF_SECT(x)  SZ_HEAD
#define OFF_EMIT(x)  (OFF_SECT(x) + ((long)(x).oh_nsect * SZ_SECT))
#define OFF_RELO(x)  (OFF_EMIT(x) + (x).oh_nemit)
#define OFF_NAME(x)  (OFF_RELO(x) + ((long)(x).oh_nrelo * SZ_RELO))
#define OFF_CHAR(x)  (OFF_NAME(x) + ((long)(x).oh_nname * SZ_NAME))
#define OFF_EXTH(x)  (OFF_CHAR(x) + (x).oh_nchar)
#define OFF_SEGM(x)  (OFF_EXTH(x) + (long)SZ_EXTH)
#define OFF_ALLO(x,y) (OFF_SEGM(x) + ((long)(y).eh_nsegm *
                                      SZ_SEGM))

#define OFF_TKSECT(x)   SZ_TKHEAD
#define OFF_TKEMIT(x)   (OFF_TKSECT(x) + ((long)(x).oh_nsect *
                                          SZ_TKSECT))
#define OFF_TKRELO(x)   (OFF_TKEMIT(x) + (x).oh_nemit)
#define OFF_TKNAME(x)   (OFF_TKRELO(x) + ((long)GET_NRELO(x) *
                                          SZ_TKRELO))
#define OFF_TKCHAR(x)   (OFF_TKNAME(x) + ((long)GET_NNAME(x) *
                                          SZ_TKNAME))
#define OFF_TKEXTH(x)   (OFF_TKCHAR(x) + (x).oh_nchar)
#define OFF_TKSEGM(x)   (OFF_TKEXTH(x) + (long)SZ_TKEXTH)
#define OFF_TKALLO(x,y) (OFF_TKSEGM(x) + ((long)(y).eh_nsegm *
                                          SZ_TKSEGM))

#endif /* __OUT_H_DEFINED */
```

APPENDIX B

MACRO PREPROCESSOR OUTPUT FILES

TASKING

8 APPENDIX

1 ASSEMBLY FILE

m166 outputs a source file which serves as an input file for **a166**. In this source file all macros are replaced with source lines. The default file extension is `.src`.

Example:

The following file, `eg.asm`:

```
@DEFINE RDF
     REGDEF R0-R15
@ENDD

@RDF

seg1 SECTION CODE

fun  PROC NEAR
     NOP
     MOV r1, r2
     RET
fun  ENDP

seg1 ENDS

END
```

results in the following assembly file (`eg.src`) after processing by **m166**:

```
#line 1 "eg.asm"


     REGDEF R0-R15

seg1 SECTION CODE

fun  PROC NEAR
     NOP
     MOV r1, r2
     RET
fun  ENDP

seg1 ENDS

END
```

The macro @RDF has been replaced by ' REGDEF R0-R15'.

2 LIST FILE

The list file is optional. **m166** generates a list file with default file extension `.mpl` when the PRINT control is used.

Example:

The following file (`eg.mpl`) is the list file generated when preprocessing the file (`eg.asm`) of the previous section:

```
C166/ST10 macro preprocessor va.b rc   SNzzzzzz
            Date: Jun 10 1997  Time: 17:29:23  Page:   1
eg

                 LINE   SOURCELINE


                    0   #line 1 "eg.asm"
                    1   @DEFINE RDF
                    2           REGDEF R0-R15
                    3   @ENDD
                     +0
                    4
                    5   @RDF
                     +1         REGDEF R0-R15
                    6
                    7   seg1    SECTION CODE
                    8
                    9   fun     PROC NEAR
                   10           NOP
                   11           MOV r1, r2
                   12           RET
                   13   fun     ENDP
                   14
                   15   seg1    ENDS
                   16
                   17   END

total errors: 0, warnings: 0
```

2.1 PAGE HEADER

Header information is printed at the top of the first page. The page header consists of three lines.

The first line contains the following information:

- information about macro preprocessor name
- version and serial number
- invocation date and time
- page number

The second line contains name of the module.

The third line is an empty line.

Example:

```
C166/ST10 macro preprocessor va.b rc   SNzzzzzz   Date: Jun 10 1997
Time: 17:29:23  Page:   1
eg
```

2.2 SOURCE LISTING

The following line appears below the header lines:

```
LINE     SOURCELINE
```

The different columns are discussed below.

LINE This column contains the line number. This is a decimal number indicating each input line, starting from 1 and incrementing with each source line. +0 indicates macro preprocessor lines that will be deleted. +1 indicates lines inserted in the assembly file.

SOURCELINE
This column contains the source text. This is a copy of the source lines from the assembly file.
Lines below +1 indicate expanded source lines. For ease of reading the list file, tabs are expanded with sufficient numbers of blank spaces.

If the source column in the listing is too narrow to show the whole source line, the source line is continued in the next listing line.

Errors and warnings are included in the list file following the line in which they occurred. Errors/Warnings are documented by error/warning numbers and error/warning messages and are marked with '****' in the first 4 positions of the line in the list file. E is an error, W is a warning.

Example:

```
                    LINE   SOURCELINE

                       0   #line 1 "eg.asm"
                       1   @DEFINE RDF
                       2             REGDEF R0-R15
                       3   @ENDD
                        +0
                       4
                       5   @RDE
**** E ....: error message
```

2.3 TOTAL ERROR/WARNING PAGE

The last page of the list file contains a line indicating the total number of errors and warnings found. If everything went well, this page must look like this:

```
total errors: 0, warnings: 0
```

3 ERROR PRINT FILE

This is an output file with errors and warnings detected during macro preprocessing. This file must be defined by the ERRORPRINT control. Errors and warnings are also printed to standard output. The default file name for the error print file is the source file name with extension **.mpe**.

The error print file starts with a header.

Then the text "Error report:" is printed. On the next line the name of the source module is printed: *name*: Under this line, the source lines containing errors are printed with their errors. The last line contains the total number of errors found.

Example:

```
C166/ST10 macro preprocessor va.b rc  SNzzzzzzzz-zzz (x) year TASKING, Inc.

Error report :
tst.asm:
       4: @define true
E 252: Definition-terminating keyword ENDD expected

total errors: 1, warnings: 0
```

APPENDIX C

ASSEMBLER OUTPUT FILES

TASKING

9 APPENDIX

1 LIST FILE

The list file is the output file of the assembler which contains information about the generated code. The amount and form of information depends on the use of several controls. By default the name is the basename of the assembly source file with the extension `.lst`. The name can also be user defined by the PRINT control.

1.1 LIST FILE HEADER

If the HEADER control is in effect, a header page is printed as the first page in the list file. A header page consists of a page header (see explanation below), information about the invocation of the assembler and a status list of the primary assembler controls.

Page Header

If the PAGING control is in effect, header information is printed at the top of each page. The page header is always printed on the header page if the HEADER control is active. The page header consists of three lines.

The first line contains the following information:

- information about assembler name
- version and serial number
- invocation date and time
- page number

The second line contains a title specified by the TITLE control.

The third line is an empty line.

Example:

```
C166/ST10 assembler va.b rc    SNzzzzzzzz-zzz   Date: Jun 10 1997
Time: 17:29:23  Page:   1
Title for demo use only
```

1.2 SOURCE LISTING

The following line appears below the header lines:

```
 LOC  CODE         LINE     SOURCELINE
```

The different columns are discussed below.

LOC This is the location counter or the resulting value of an ORG directive. The location counter is the hexadecimal number that represents the offset from the beginning of the SECTION being assembled. In lines that generate object code, the value is at the beginning of the line. For ORG lines, the value shown is the new value. For any other line there is no display. Absolutely located sections start counting at the specified address, using a relevant mask for page or segment bound section types.

Example:

```
 LOC  CODE         LINE     SOURCELINE
                     .
                     .
                     .
                    11      Sec1     SECTION   DATA
0000 0001           12     Value1    DW   100H
0002 0002           13     Value2    DW   200H
0004                14               ORG  $ + 10
000E 0300           15     Value3    DW   3
                    16      Sec1     ENDS
```

CODE This is the object code generated by the assembler for this source line, displayed in hexadecimal format. The displayed code need not be the same as the generated code that is entered in the object module. The code can also be relocatable code or a relocatable part and external part. In this case the letter 'R' is printed at the end of the code field. In case the code only contains an external part, the letter 'E' is printed at the end of the code field. A number is printed at the end of the code to countdown Extend instructions.

Example:

```
 LOC  CODE         LINE     SOURCELINE

                     1     RBank REGDEF    R0 - R5
                     2
                     3      DSEC    SECTION DATA
0000                 4     VARX    DS      2
0002 0000      R     5     AWORD   DW      PAG VARX
                     6     DSEC    ENDS
                     7
                     8     CodeSec SECTION CODE
                     9
                    10     Task1   PROC TASK ATask INTNO = 0
                    11
0000                12     Start:
0000 F2080000 R     13             MOV CP, RBank
0004 E60940FA       14             MOV SP, #0FA40H
0008 CC00           15            NOP
                    16
000A FB88           17             RET
                    18
                    19     Task1   ENDP
                    20
                    21     CodeSec ENDS
                    22
                    23     END
```

LINE This column contains the line number. This is a decimal number indicating each input line, starting from 1 and incrementing with each source line. If listing of the line is suppressed (i.e. by NOLIST), the number increases by one anyway.

Example:

The following source part,

```
            MOV R0, Value1
$NOLIST
            MOV R1, Value2
$LIST
            CALL AddProc
```

results in the following list file part:

```
 LOC  CODE         LINE    SOURCELINE

                    .
                    .
0008 F2F00000 R 28                 MOV R0, Value1
                  29   $NOLIST
0010 BB03       32                 CALL AddProc
```

SOURCELINE

This column contains the source text. This is a copy of the source lines from the source module. For ease of reading the list file, tabs are expanded with sufficient numbers of blank spaces.

If the source column in the listing is too narrow to show the whole source line, the source line is continued in the next listing line.

Errors and warnings are included in the list file following the line in which they occurred. Errors/Warnings are documented by error/warning numbers and error/warning messages and are marked with '****' in the first 4 positions of the line in the list file. E is an error, W is a warning.

Example:

```
 LOC  CODE         LINE    SOURCELINE

                   .
                   .
0016 F2F00000 R    46            MOV R0, ABYTE
**** E  45: undefined symbol 'ABYTE'
```

1.3 SECTION MAP

If the SYMBOLS control is in effect, a section map is printed after the source listing. The section map starts on a new page. The section map contains information about section names, start addresses, section types, align types, combine types, groups and classes.

The section map is sorted by the section names. An example is given below.

```
Sections:

Name            Start     bit   Length    Type   Algn   Comb    Group           Class
-------------------------------------------------------------------------------------
CSEC.........   000000h         00001eh   CODE   WORD   PRIV    ..........      ..........
DSEC1........   000000h         000006h   DATA   WORD   PRIV    GROUPC....      ..........
DSEC2........   000000h         000002h   DATA   WORD   PRIV    GROUPC....      ..........
BSEC.........   00FFE0h   00h   000002h   BIT    BIT    PRIV    ..........      ..........
```

Explanation of terms used in the section map:

Name — The section name.

Start — The start address of the section.

bit — The bit position, counted from the start position.

Length — The length of the section.

Type — The section type. The following types are possible:

```
CODE      CODE section
DATA      DATA section
LDAT      Large DATa section
HDAT      Huge DATa section
PDAT      Paged DATa section
BIT       BIT section
```

Algn — The section align type. The following align types are possible:

```
BIT       BIT alignment
BYTE      BYTE alignment
WORD      WORD alignment
DWORD     Double word alignment
PAGE      PAGE alignment
SEGM      SEGMENT alignment
BITA      BITADDRESSABLE
          (word alignment)
PECA      PECADDRESSABLE
          (word alignment)
IRAM      IRAMADDRESSABLE
          (word alignment)
```

Comb — The section combine type. The following combine types are possible:

```
PRIV      PRIVATE
PUBL      PUBLIC
GLOB      GLOBAL
COMM      COMMON
SSTK      SYSSTACK
USTK      USRSTACK
GUSTK     GLBUSRSTACK
AT..      Absolute section
```

Group — A user defined group name. This is the name of the group, the section belongs to.

Class — A user defined class name. This is the class assigned to the named section.

1.4 GROUP MAP

After the section map, the group map is written to the list file if the control SYMBOLS is active.

Sorted by the groups' names, the following information is provided:

```
Groups:

Name          Type  Member

DGRP          DATA  DSEC
                    ESEC
CGRP          CODE  FSEC
```

where,

Name — Is the name of the group.

Type — Indicates the type of the group. The following types are possible:

```
CODE        CODE group
DATA        DATA group
```

Member — Lists the section name(s) which are member of the group specified under `Name`.

The printing is accomplished in accordance with the page width. This occurs by adjusting the group name and member columns. If the respective names exceed the column width, they are wrapped automatically, one time only. Any remaining excessive characters are truncated.

1.5 SYMBOL TABLE

If the SYMBOLS control is in effect, a symbol table is printed after the group map. The symbol table is titled by 'Symbols'. Below this title are the columns of information. An example of a symbol table is listed below.

The printing is accomplished in accordance with the page width. This occurs by adjusting the name and attribute columns. If the respective names exceed the column width, it is wrapped automatically, one time only. Any remaining excessive characters are truncated.

```
Symbols:

Name  Id Type  Value    Attribute   Block

BVA1  V  BYTE  0040     L DSEC
EVAR  V  WORD  ....     E
```

where,

Name — Is the name of the symbol. User-defined symbols are listed in alphabetical order using the ASCII ordering of characters.

Id Type — Is the Id / Type of the symbol you have defined, and it may be any of the following:

```
V  BIT     A variable of type BIT
V  BYTE    A variable of type BYTE
V  WORD    A variable of type WORD
L  NEAR    A label of type NEAR
L  FAR     A label of type FAR
P  NEAR    A procedure of type NEAR
P  FAR     A procedure of type FAR
P  TASK    An interrupt procedure
C  DATA3   A number of maximum size 3-bit
C  DATA4   A number of maximum size 4-bit
C  DATA8   A number of maximum size 8-bit
C  DATA16  A number of maximum size 16-bit
I  INTNO   An interrupt number
R  REGBANKA register bank name
B  name    A name defined with BIT
E  name    A name defined with EQU
S  name    A name defined with SET
```

External symbols have the type that appears in the EXTERN declaration.

Value — Is the value of the symbol. This information depends on the type of the symbol that is represented in the name column.

For variable and labels this value is the offset from the begin of the section, written as a hexadecimal number:

```
Name      Id Type    Value   Attribute      Block

BVA1      V  BYTE    0040    L DSEC
NPRC      P  NEAR    0002    L CSEC    0004
```

For external symbols, register bank names and only declared interrupt names '....' are entered in this field. This means that the information is available, but not known during assembly:

```
Name      Id Type    Value   Attribute      Block

EVAR      V  WORD    ....    E
```

For numbers this field indicates the value of the number, written as a hexadecimal number:

```
Name      Id Type    Value   Attribute      Block

CONST     C  DATA16  03FF    L
```

For symbols defined with EQU or SET this field contains the corresponding result.

```
Name      Id Type    Value   Attribute      Block

EQUNAME   E  BYTE    0002    L
SETNAME   S  DATA4   000F    L
```

For symbols defined with BIT have the bit word offset and the bit position in this field.

```
Name      Id Type    Value   Attribute      Block

BITNAME   E  BIT     0002.3  L
```

Attribute

In the first column the id P, E, L or G is entered, representing the scope of the symbol (P=PUBLIC, E=EXTERNAL, L=LOCAL, G=GLOBAL).

If the symbol is a variable, label or procedure, the attribute field additionally contains the name of the section where that symbol is defined.

```
Name      Id Type    Value   Attribute      Block

BVA1      V  BYTE    0040    L DSEC
```

Block

If the symbol is a procedure, its length is entered in this column.

1.6 REGISTER AREA TABLE

The register area table is printed at the bottom of the list file if SYMBOLS is in effect. This table contains the register area for all procedures. An example is listed below.

```
Register area:

Name  R  R  R  R  R  R  R  R  R  R  R  R  R  R  R  R
      0  1  2  3  4  5  6  7  8  9  10 11 12 13 14 15
PROC1 +        +  +              +
PROC2       +     +           +     +
PROC3          +  +  +              +  +
_____________________________________________________
      +     +  +  +  +        +  +  +  +
```

1.7 XREF TABLE

If the XREF control is in effect, the table with the structure illustrated below is added to the list file on a new page. The column 'Defined' contains the number of the source line where the respective symbol is defined, followed by the number(s) of the source line(s) where this symbol is used.

```
Symbol Xref Table:

Name     Defined  - used in line(s)

BITSEC   67        88   172
BITVAR1  75       123   175   293   303
BITVAR2  86       124   306
BVAR     61       176
CSEC     34        55   174   190   201   207
DSEC     58        64   173   195   196   202   208
EBITVAR  27       107   125   183   219   294   303   306   334
EBVAR    27       184
ECON16   26       161   220   221   222   223   230   258
ECON3    26        98   237
ECON4    26       106   218   244   334
```

1.8 TOTAL ERROR/WARNING PAGE

The last page of the list file contains a line indicating the total number of errors and warnings found. If everything went well, this page must look like this:

```
total errors: 0, warnings: 0
```

2 ERROR PRINT FILE

This is an output file with errors and warnings detected during assembly. This file must be defined by the ERRORPRINT control. Errors and warnings are also printed to standard output. The default file name for the error print file is the source file name with extension `.erl`.

The error print file starts with a header.

Then the text “Error report:” is printed. On the next line the name of the source module is printed: *name*: Under this line, the source lines containing errors are printed with their errors. The last line contains the total number of errors found.

Example:

```
C166/ST10 assembler va.b rc  SNzzzzzzzz-zzz (c) year TASKING, Inc.

Error report :
tst.src:
  42:    MOV FIRSTREG,  BN    ; register contains value of FIRSTBIT
E 103: invalid operand type

total errors: 1, warnings: 0
```

ASSEMBLER OUTPUT

APPENDIX D

LINKER/LOCATOR OUTPUT FILES

TASKING

D APPENDIX

1 PRINT FILE

The print file is the output file of **l166** which contains textual information about the linking/locating. The amount and form of information depends on the use of several controls. The following information can be present in the print file:

- Header page
- Page header
- Invocation information
- Memory map
- Symbol table
- Interrupt table
- Register map
- Error report

For the link stage the default filename is the basename of the output file with the extension `.lnl`. For the locate stage the default filename is the basename of the output file with the extension `.map`. The name can also be user defined by the PRINT control. If NOPRINT is specified, no print file is generated.

1.1 PRINT FILE HEADER

If the HEADER control is in effect, a header page is printed as the first page in the print file. A header page consists of a page header (see explanation below), information about the invocation of **l166** and a status list of all link/locate controls.

Page Header

If the PAGING control is in effect, header information is printed at the top of each page. The page header is always printed on the header page if the HEADER control is active. The page header consists of three lines.

The first line contains the following information:

- information about linker/locator name
- version and serial number
- invocation date and time
- page number

The second line contains a title specified by the TITLE control.

The third line is an empty line.

Example:

```
166 linker/locator va.b rc   SNzzzzzz-zzz   Date: Aug 25 1993  Time: 16:20:29  Page:  1
listex
```

Action

Under the page header this line indicates the stage of **l166**: Linking or Locating.
Examples**:**

```
Action     :     Linking
```

or

```
Action     :     Locating
```

Invocation

This part contains information about the invocation.
Example**:**

```
Invocation:     l166 LOC PTOG listex.obj listexf.obj
                TO listex.out MEMORY(ROM(0 TO 3fffh)
                RAM(0C000h TO 0FFFFh) ) LSY LRG HEADER
```

Output file

This part prints the name of the output file. Behind the output filename, the module name is printed within parentheses.
Example:

```
Output to :     listex.out (listex)
```

Input files

This part lists the names of the input files. Behind the input filename, the module name is printed within parentheses. Then the keyword TASK: is printed, followed by the task name of the input module.
Example**:**

```
Input from: listex.obj (listex) TASK: ?TASK0001_listex
            listexf.obj (listexf)
```

1.2 MEMORY MAP

When the MAP control is in effect, **l166** generates a memory map, and and interrupt table in the print file. In the print file for the link stage, the memory map contains information about sections only. The memory map in the print file for the locate stage also contains information about register bank addresses, interrupt vectors, SFR area. The memory map is sorted by names in alphabetical order.

Example:

```
Memory map     :

Name             No.  Start    End       Length    Type  Algn  Comb  Mem T Group Class Module
-------------------------------------------------------------------------------------------
?INTVECT......   ...  000000h  0001FFh   000200h   ....  ....  ....  ROM .... ........ ......
OPTEXT_2_CO...     1  000200h  000207h   000008h   LDAT  WORD  GLOB  ROM .... D_CLASS. listex.
                                                                                  listexf
OPTEXT_1_PR...     0  000208h  000245h   00003Eh   CODE  WORD  GLOB  ROM .... F_CLASS. listex.
OPTEXT_3_IO...     2  000246h  000249h   000004h   DATA  WORD  PRIV  ROM .... ........ listex.
EXF...........     3  00024Ah  000371h   000128h   CODE  WORD  PRIV  ROM .... F_CLASS. listexf
System Stack..   ...  00FA00h  00FBFFh   000200h   ....  ....  ....  RAM .... ........ .......
Reg. bank 0...   ...  00FC00h  00FC1Fh   000020h   ....  WORD  ....  RAM .... ........ .......
PEC Pointer..    ...  00FDE0h  00FDEBh   00000Ch   ....  ....  ....  RAM .... ........ .......
SFR Area......   ...  00FE00h  00FFFFh   000200h   ....  ....  ....  RAM .... ........ .......
```

Explanation of terms used in the memory map:

Name — The name of the item.

No. — The section number, used in the symbol table. A ! between the Name and the No. field indicates that an error message or a warning message was issued on this item.

Start — The start address of the item.

End — The end address of the item.

Length — The length of the item.

Type — The section type. The following types are possible:

```
CODE      CODE section
DATA      DATA section
LDAT      Large DATa section
HDAT      Huge DATa section
PDAT      Paged DATa section
BIT       BIT section
```

Algn — The section align type. The following align types are possible:

```
BIT       BIT alignment
BYTE      BYTE alignment
WORD      WORD alignment
DWORD     Double word alignment
PAGE      PAGE alignment
SEGM      SEGMENT alignment
BITA      BITADDRESSABLE
          (word alignment)
PECA      PECADDRESSABLE
          (word alignment)
IRAM      IRAMADDRESSABLE
          (word alignment)
```

Comb — The section combine type. The following combine types are possible:

```
PRIV      PRIVATE
PUBL      PUBLIC
GLOB      GLOBAL
COMM      COMMON
SSTK      SYSSTACK
USTK      USRSTACK
GUSTK     GLBUSRSTACK
AT..      Absolute section
```

Mem — The kind of memory in which the section should be located: ROM or RAM.

T — The type of the group, if the section has a group. This field can have two values:

```
P    PUBLIC group
G    GLOBAL group
```

Group — A user defined group name. This is the name of the group, the section belongs to.

Class — A user defined class name. This is the class assigned to the named section.

Module — This field contains the module name of the module the section belongs to. If a section is combined the linker/locator shows all module names of the module the section is combined from.

1.3 SYMBOL TABLE

If the LISTSYMBOLS control is in effect, a symbol table is printed after the memory map. The symbol table contains information about the name of the symbol, the number of the symbol, the value of the symbol and the type of the symbol. The symbols are listed in alphabetical order. An example of a symbol table is listed below.

```
Symbol table   : listex.obj(listex)

Symbol          No.   Value       Type      Symbol            No.   Value          Type
----------------------------------------    ----------------------------------------
 <NO NAME>....  ...   0000001h    INT GLB   ?TASK0001_listex.   0   0000208h       TSK LOC
BANK1.........  ...   000FC00h    REG LOC   COMR1............ ABS   000FC0Eh       REG LOC
COMR2.........  ...   000FC1Ch    REG LOC   _main............   0   0000208h       NEA GLB
_putchar......    0   0000236h    NEA LOC   _textout.........   0   0000216h       NEA GLB
loop..........    0   0000228h    NEA LOC   msg..............   1   0000200h       BYT GLB
stdbuf........    2   0000248h    WOR GLB   stdio............   2   0000246h       WOR GLB
write.........    0   0000218h    NEA LOC


Symbol table   : listexf.obj(listexf)

Symbol          No.   Value       Type      Symbol            No.   Value          Type
----------------------------------------    ----------------------------------------
 <NO NAME>....  ...   000FC0Eh    REG LOC   COMR1............ ...   000FC0Eh       REG LOC
F_PROC........    3   000024Ah    NEA LOC   lab0.............   3   000024Ah       NEA LOC
lab1..........    3   0000370h    NEA LOC
```

where,

Symbol — Is the name of the symbol.
`<NO NAME>` is entered for internally used symbols or if the name of the symbol is not known.

No. — Is the number of the section in which the symbol is defined. The value ABS is used for EQUates and SET symbols.

Value — Is the value of the symbol. This information depends on the type of the symbol.

Type — Indicates the type of the symbol. It consists of two columns. The first column can have the following values:

```
BYT       Variable of type BYTE
WOR       Variable of type WORD
BTW       Variable of type BITWORD
BIT       Variable of type BIT
FAR       Label of type FAR
NEA       Label of type NEAR
TSK       Interrupt procedure name
REG       Register bank name
INT       Interrupt number
DT3       Number of maximum 3-bit
DT4       Number of maximum 4-bit
DT8       Number of maximum 8-bit
D16       Number of maximum 16-bit
```

The second column can have the following values:

```
?FI       ?FILE debug symbols
?LI       ?LINE debug symbols
?SY       ?SYMB debug symbols
EXT       External symbols
GLB       Global   symbols
LOC       Local    symbols
PUB       Public   symbols
```

1.4 INTERRUPT TABLE

If the MAP control is in effect, an interrupt vector table is printed after the symbol table. The interrupt vector table contains information about the interrupt vector address, the interrupt number, the interrupt name and the name of the task. An example of a symbol table is listed below.

```
Interrupt table:

Vector      Intno   Start     Intnoname   Taskname
-------------------------------------------------------------------
0000004h    0001h   0000208h  .........   ?TASK0001_listex........
```

where,

Vector Is the interrupt vector address.

Intno Is the interrupt number.

Start Is the start address of the task.

Intnoname Is the name of the interrupt.

Taskname Is the name of the task where the interrupt belongs to.

1.5 REGISTER BANK MAP LINK STAGE

If the LISTREGISTERS control is in effect, a register bank map is generated in the print file. A register bank map contains information about all common and private areas in a register bank. The length of a register bank never exceeds 16 registers.

Examples:

```
Register banks  :   REGB0
                01234##---#####-
                     ^    ^
                     |    |....... COM_A2
                     |............ COM_A1


Register bank   :    no definitions, only declarations
                ---345----------
```

Explanation:

If a register bank is defined (first example), the name of the register bank is given (REGB0). If a register bank is declared, the line ”no definitions, only declarations” is given. The line below indicates the register bank usage:

0 ... F	Private part
#	Common part
-	Not used

An arrow points to the start of a common part of the register bank. Each time a common part starts, another arrow is introduced. The names behind the arrows are the names of the common parts.

1.6 REGISTER MAP LOCATE STAGE

If the LISTREGISTERS control is in effect, a register map is generated in the print file. A register map contains information about all register bank combinations. It indicates which part is common, which part is private and which part is not used. The register banks can be longer than 16 because the private and common register banks are combined by the locate stage into one register bank.

Example:

```
Register banks :    combination of register definitions

                Reg. bank 0
                0123456######-##-------
                ^      ^      ^
                |      |      |.. COMR2 ........ FC1Ch
                |      |......... COMR1 ........ FC0Eh
                |................. BANK1 (listex) FC00h
```

Explanation:

In this example Reg. bank 0 and Reg. bank 1 are the names of register banks created by the locate stage of **l166**. These names are also used in the memory map. The line below the register bank names indicate the registers of the combined register bank:

0 ... F	Private part
#	Common part
-	Not used
!	Error

The arrows point to a private or common part of the register bank. Each time a new part starts, another arrow is introduced. The address in the last column indicates the address of a register pointed to by an arrow.

The first column contains the name of a private or common part, between parentheses the task name is printed.

1.7 SUMMARY CONTROL

When the SUMMARY control is up, the linker/locator will print a class/group/section summary. Additionally, some statistics on the linking or locating process are generated as well.
Example:

```
Locate summary :

Class     Name         Size  Start
<NO NAME>  ?INTVECT    00512 000000h
  Total class size: 0000512

CNEAR     VARIAB_1_NB 00018 000200h
  Total class size: 0000018

CINITROM  C166_BSS    00008 00024Ah
  Total class size: 0000008

CPROGRAM  VARIAB_2_PR 00056 000212h
  Total class size: 0000056

Total size:         0000594


        Number of symbols               : 15
        Number of sections              : 4
        Number of groups                : 0
        Number of classes               : 3
        Number of modules               : 1
        Total section size              : 594
        Total memory size               : 1000000h
                consisting of RAM       : unspecified
                              ROM       : unspecified
        Total RAM filled                : 0000252h
        Total ROM filled                : 0000000h
        System stack size               : 0
        Heap size                       : 0
        User stack size                 : 0
        Time spent                      : 00:00:2.20
```

Explanation: In this example, three classes were defined (CNEAR, CINITROM and CPROGRAM). None of the classes contained groups and all sections inside the classes were thus part of the same group. In that case, only a total section size is printed and the total group information is skipped.

1.8 ERROR REPORT

The last part of the print file contains an error report with all error and warning messages, depending on the WARNING/NOWARNING control. The last line contains the total number of errors and warnings found.

Example:

```
Error report : W 130: missing system stack definition
               total errors: 0, warnings: 1
```

APPENDIX E

GLOBAL STORAGE OPTIMIZER ERROR MESSAGES

TASKING

APPENDIX

1 INTRODUCTION

This appendix contains all warnings (W), errors (E), fatal errors (F) and system errors (S) of **gso166**.

2 ERRORS AND WARNINGS

E 001: syntax error reading file: '*file*' (line *line_number*): '*string*' expected

Check the syntax in your file.

E 002: syntax error reading file: '*file*' (line *line_number*): unexpected '*string*'

Check the syntax in your file.

E 003: object: '*object*' is qualified in memory 'AUTO' in optimized SIF file

Objects in .sif files cannot be classified as 'AUTO'. Check the .sif file and change 'AUTO' into one of the following memory spaces: NEAR, SYSTEM, IRAM, XNEAR, FAR, SHUGE, HUGE, BIT or BITA.

F 004: memory allocation error

Probably the memory is full. Try to free some memory.

E 006: bad numerical constant in SIF file (line *line_number*)

Check the syntax of the numerical constant.

E 007: newline character in string constant: SIF file (line *line_number*)

String constants in `.sif` files cannot have a '\n' newline character.

E 008: identifier too long: SIF file (line *line_number*)

The identifiers can have a maximum length of 500 characters.

F 012: sorry, more than *number* errors

gso166 exits when 40 or more errors have been reported.

F 013: illegal argument '*argument*' to option: '*-option*'

The argument specified with this option is invalid.

F 014: illegal option: 'option'

This option is not known to **gso166**.

F 015: missing '*argument*' to option: '*-option*'

This option requires an argument.

F 016: cannot open file: '*file*'

gso166 is unable to read or write to file. Check whether the file exists and whether you have writing and/or reading rights for this file.

F 017: no SIF files

There are no files to be processed. Specify one or more files.

F 018: missing -o<file> option

You must always specify the -o*file* option.

E 019: memory models cannot be mixed (file: '*file*')

All `.sif` and `.gso` files must have the same memory model.

E 020: memory limit cannot be greater than: *max_size*

With the **-m***space*=*size*[,*rom-part*] option, the size of the memory space was set greater than the maximum value allowed.

E 022: unresolved symbol: '*symbol*' in module: '*module*' (file: '*file*')

No public or global symbol definition was found to resolve the symbol.

E 023: object '*object*' has zero size (module: '*module*', file: '*file*')

After linking the application objects are not allowed to have zero size.

W 024: unreferenced object '*object*' (module: '*module*', file: '*file*')

The object is not referenced by any C-code. Note that references made by static initializations are not taken into account.

E 025: multiple memory spaces for object '*object*'

- An object is allocated in different memory spaces (cross module).
- The memory of an object already allocated in a particular memory space cannot be overruled by some other memory in a pre-allocation file.

W 026: duplicate module: '*module*' in file: '*file*' original declaration in file: '*file*' - ignored

There are two modules with the same name in the application. This warning typically shows up when one wants to overrule a module in a library.

E 027: threshold cannot be larger than max available space (*max_space*)

The threshold in the **–T***space***=***size1*[**,***size2*] option cannot be larger than the size of the RAM/ROM part of the memory space.

F 028: Evaluation expired

Only used in evaluation versions of **gso166**.

F 029: protection error: *message*

The C166/ST10 global storage optimizer is a protected program. Check for correct installation.

E 030: attempt to overwrite source file: '*file*'

An output file has the same file name as an input file.

E 031: cannot allocate '*object*' in default pointer memory space

In the SMALL and TINY memory models, all objects referenced by their address must be allocated in the default pointer memory space.

E 032: no space left for pre-allocated object: '*object*'

A pre-allocated object cannot be located due to little memory in your target.

W 033: duplicate pre-allocated global object definition: '*object*'

There is a double entry for a global object in the pre-allocation files.

W 034: duplicate global object definition: '*object*' in module: '*module*'

An object is defined more than once in a module.

W 035: pre-allocated object: '*object*' not found in application - ignored

A pre-allocation file specifies the memory of an object that cannot be found in the application. Check the pre-allocation file.

W 036: pre-allocated object '*object*' is referenced by its address and not allocated in default pointer memory space

A pre-allocated object is referenced by its address and its memory is not set to the default pointer memory space. Change the memory space in the pre-allocation file.

E 038: pre-allocated object '*object*' cannot have memory: 'AUTO'

You cannot assign memory AUTO to an object in a pre-allocation file.

W 039: there are errors - no files updated

Except for the `.asif` file, **gso166** will not update any file in case an error has occurred.

E 040: different sizes for object: '*object*'

A public object was defined with different sizes in two modules.

W 041: memory space 'XNEAR' can only be used in segmented memory models - ignored

You can use the memory space XNEAR only with the MEDIUM, LARGE or HUGE memory model. The variable definition is ignored now.

E 042: public/local object: '%s' with size 'NOTSET' can not be a candidate for automatic allocation

After linking, objects with an unknown size must be in a valid memory space other than AUTO.

E 043: cannot allocate storage for: '*object*'

gso166 is unable to allocate storage for a particular object. The memory of your target is probably all used.

F 044: unknown linkage for object: '*object*' file: '*file*'

The *linkage* field in a `.sif` or `.gso` file is set to "UNKNOWN". Change the *linkage* field to PUBLIC, LOCAL or EXTERN.

W 045: memory space '*mem_space*' cannot be used in TINY memory model - ignored

The memory spaces: FAR, HUGE, SHUGE or XNEAR are only allowed in the MEDIUM, LARGE or HUGE memory model.

E 046: pre-allocated object '*object*' has illegal memory space for memory model

In the TINY memory model an object cannot be allocated in one of the memory spaces FAR, HUGE, SHUGE or XNEAR in a pre-allocation file.

W 047 External object size differs from definition: '*object*'

Example:

```
mod1.c                  mod2.c
int array[5];           extern int array[3];
```

W 048: different sizes for external object: '*object*'

Example:

```
mod1.c                    mod2.c
extern int array[5];      extern int array[10];
```

W 049: illegal memory space: '*mem_space*' in reserve control - ignored

The specified memory space in the $RESERVE control is illegal. The memory space must be one: BIT, BITA, NEAR, SYSTEM, IRAM, XNEAR, FAR, HUGE or SHUGE.

F 050: multiple memory types for object '*object*'

An object is allocated in different memory types (cross-module).

F 051: rom-part cannot be larger than total memory size for memory space: '*mem_space*'

The size of the ROM area cannot be larger than the total size of the memory space.

S xxx: assertion failed - please report

An internal consistency check has failed. This error is an internal error which should not occur. However if it occurs, please contact your sales representative. Remember the situation and invocation in which the error occurs and make a copy of the source file.

GSO166 ERRORS

APPENDIX F

MACRO PREPROCESSOR ERROR MESSAGES

TASKING

APPENDIX

1 INTRODUCTION

This appendix contains all warnings (W), errors (E), fatal errors (F) and internal errors (I) of **m166.**

2 WARNINGS (W)

Some warnings are only visible when you set the warning level to 2 (display all warnings). This is mentioned at the particular warnings as 'Level 2 warning'. See also macro preprocessor control WARNING.

W 100: Illegal binary number detected – value set to 0

An invalid binary number was detected. Its value is replaced with 0 for further processing.

W 101: Illegal octal number detected – value set to 0

An invalid octal number was detected. Its value is replaced with 0 for further processing.

W 102: Illegal decimal number detected – value set to 0

An invalid decimal number was detected. Its value is replaced with 0 for further processing.

W 103: Illegal hexadecimal number detected – value set to 0

An invalid hexadecimal number was detected. Its value is replaced with 0 for further processing.

W 104: New-Line in string detected – string truncated

All characters following the line-feed are truncated for a line feed within a string which has not been terminated.

W 105: Illegal character detected – is ignored

Characters that do not exist in the character set of the macro processor are interpreted as a delimiter.

W 106: Label "*name*" unreferenced in macro definition

A macro label was defined in the local list that is not used in the macro body.

W 107: Formal parameter "*name*" unreferenced in macro definition

Parameter is defined in the parameter list of a macro that is not used in the macro body.

W 108: Redefinition of macro name: *name*

The macro displayed was redefined.

W 109: Redefinition of macro variable: *name*

The macro variable displayed was redefined. (Level 2 warning)

W 110: Redefinition of macro string: "*string*"

The macro string was redefined. (Level 2 warning)

W 112: Non expanding macro calls are only possible as actual parameters

The call of a macro in literal mode is only possible when this occurs as an actual parameter of another macro.

W 113: Input–string too long – succeeding characters are truncated

A string read by the IN function from the console can not be longer than 2560 characters. Strings longer than this are truncated.

W 114: *number*: invalid warning level

Warning level must be 0, 1 or 2.

W 115: no source module

No input module was found in the invocation.

W 116: illegal pagewidth, set to 120

The PAGEWIDTH control must be supplied with a number between 60 and 255

W 117: invalid tab size, set to 8

The size given with the TABS control must be between 1 and 20.

W 121: macro is used but not defined (assuming '0')

(Level 2 warning)

W 224: primary control '*name*' already set

The primary control was previously set. (Level 2 warning)

3 ERRORS (E)

E 200: syntax error

A statement in the source file was not according the defined syntax.

E 201: syntax error on *file*

A statement in the source file was not according the defined syntax.

E 202: non terminated string

E 203: arithmetic overflow in numeric constant

The number was too long.

E 204: illegal character in numeric constant

The format of the number is not according to the base, a character was found not belonging to the base.

E 206: missing quote '

An expected single quote was missing.

E 207: missing brace

An expected brace was missing

E 208: empty string

An empty string was found which is not valid

E 209: too much pushed back on the stream

Because of long expansions of LIT replacement the scanner pushed too much characters back on the stream

E 220: illegal control '*name*'

The named control is not valid.

E 221: numerical argument expected for control '*name*'

The argument for the control was expected to be a number.

E 222: string argument expected for control '*name*'

The argument for the control was expected to be a string.

E 223: primary control '*name*' not valid at this place

Primary controls are only allowed at the beginning of the file before any general control, directive or instruction was seen.

E 225: Include file and source file are identical

Include file may not be identical to the source-file

E 226: Include file and list file are identical

Include file may not be identical to the list-file

E 227: Include file and output file are identical

Include file may not be identical to the output-file

E 228: Include files nested too deeply (max. 32)

Include files may be nested up to level 32

E 240: division by zero

A division by zero was found in an expression

E 250: Macro name expected

An invalid or missing identifier was specified after the keyword DEFINE

E 251: Define in Define not allowed

Definition of a macro inside another user defined macro is not allowed

E 252: Definition-terminating keyword ENDD expected

The actual macro definition was not terminated with the keyword ENDD

E 253: Label "*name*" was not specified in LOCAL-list

The macro label used in the actual macro body was not specified in the LOCAL list of this macro

E 254: Actual parameter expected

A valid actual macro parameter is expected

E 255: Formal parameters as actual parameters in expanding macro definitions are not allowed

For a macro definition whose macro body is to be fully expanded at the definition time (definition in normal mode), a formal parameter can not be used as an actual parameter of a macro called in this macro body.

E 256: Macro is defined without parameters

Attempt was made to return an actual parameter to a macro that was defined without parameters

E 257: Missing actual parameter

A valid actual parameter is missing

E 258: Too many macro parameters

More parameters were returned than specified in the definition of a macro during a call

E 259: Too few macro parameters

Too few parameters were returned than specified in the definition of a macro during a call

E 260: Recursive macro call in expanding definition not possible

Recursive macro calls are not possible in a macro body which is to be fully expanded at the time of the definition

E 261: String expected (text enclosed in "...")

A string is expected at the designated position

E 262: Specifying two MATCH identifiers with the same name is not allowed

Attempt was made to use one name for both macro strings to be defined within a MATCH instruction

E 263: Nested MATCH-calls are not possible

Calls of MATCH functions can not be nested

E 264: Control-structure-terminating keyword @ENDW expected

The statement block of the actual WHILE loop was not terminated with the keyword ENDW

E 265: Control-structure-terminating keyword @ENDR expected

The statement block of the actual REPEAT loop was not terminated with the keyword ENDR

E 266: Control-structure-terminating keyword @ENDI expected

The statement block of the actual IF structure was not terminated with the keyword ENDI

E 267: Error in expression

An error was detected in the expression displayed

E 268: Formal parameters in expressions used in expanding macro definitions are not allowed

Use of formal parameters in expressions that exist in a fully expanded macro body prior to the definition time is not possible

E 269: Expression–operand expected

An operand must follow the operator

E 270: '(' expected

An open round bracket is expected

E 271: ')' expected

A closing round bracket is expected

E 272: Identifier expected

A valid identifier is expected

E 273: Identifier "*name*" not defined as macro name, -variable, -parameter, or -label

The identifier found is not a macro symbol

E 274: Separator ',' expected

A comma is expected

E 275: Separator ',' or ')' expected

A comma or left brace is expected

E 276: Source line too long - line truncated

A source line can be a maximum of 2560 characters in length. All characters exceeding this length are truncated

E 277: MACRO syntax error

General syntax error in the macro procedure.

E 278: Parser error

The parser encountered an error.

E 279: Illegal first character for identifier detected

The first character does not belong to the valid character set of an identifier.

E 280: Illegal number detected

The number displayed does not agree with the valid specification of number values and their suffixes.

E 281: '*name*' is already defined as parameter or local

A local macro name is used more than once while defining the macro. Local macro names are arguments and labels defined with the @LOCAL function.
Example:

```
@DEFINE MAC( A1, A1 ) @LOCAL( A1 ) . . .
```

This error now is issued on the second 'A1' argument and on the LOCAL A1.

E 283: Number expected

A number is expected at the designated position.

4 FATAL ERRORS (F)

F 300: user abort

The macro preprocessor is aborted by the user.

F 301: too much errors

The maximum number of errors is exceeded.

F 302: protection error: *message*

error message received from ky_init

F 303: can't create "*file*"

Cannot create the file with the mentioned name.

F 304: can't open "*file*"

Cannot open the file with the mentioned name.

F 305: can't reopen '*file*'

The file *file* could not be reopened

F 306: read error while reading "*file*"

A read error occurred while reading named file.

F 307: write error

A write error occurred while writing to the output file.

F 308: out of memory

An attempt to allocate memory failed.

F 309: illegal character

A character which is not allowed was found.

5 INTERNAL ERRORS (I)

The next errors are internal errors which should not occur. However if they occur, please contact your sales representative. Remember the situation and invocation in which the error occurs and make a copy of the source file.

I 400: *message*

I 401: assertion failed (%s,%d)

I 402: internal error: general failure (%s,%d)

I 403: internal error: unexpected control

APPENDIX G

ASSEMBLER ERROR MESSAGES

TASKING

Ω APPENDIX

1 INTRODUCTION

This appendix contains all warnings (W), errors (E), fatal errors (F) and internal errors (I) of **a166**.

2 WARNINGS (W)

Some warnings are only visible when you set the warning level to 2 (display all warnings). This is mentioned at the particular warnings as 'Level 2 warning'. See also assembler control WARNING.

W 100: no source module

No input module was found in the invocation.

W 101: primary control '*name*' already set

The primary control was previously set. (Level 2 warning)

W 102: invalid warning level

Warning level must be 0, 1 or 2.

W 103: control '*name*' implemented with m166

The control is implemented by the macro preprocessor 'm166'. Use **m166** first for getting the desired result. (Level 2 warning)

W 104: illegal pagewidth, set to 120

The PAGEWIDTH control must be supplied with a number between 60 and 255.

W 105: invalid tab size, set to 8

The size given with the TABS control must be between 1 and 20.

W 106: text after END

There was text found after the END directive. (Level 2 warning)

W 108: missing END

The END directive is missing.

W 109: only one PECDEF per module

A second PECDEF directive was found while only one is allowed, the first one will be used.

W 110: only one SSKDEF per module

A second SSKDEF directive was found while only one is allowed, the first one will be used.

W 111: nesting of CODE sections, first CODE section was '*name*'

Sections of memory type CODE cannot be nested.

W 112: overlapping COMMON and PRIVATE registers

One or more registers defined with the REGBANK directive or defined as PRIVATE with the REGDEF directive also are defined as COMMON with the REGDEF directive or the COMREG directive is used to define these registers.

W 113: location counter not on an even address

Word initialization issued on an odd address.

W 114: missing register bank definition

When using GPR you should have a REGDEF, REGBANK or COMREG directive.

W 116: REG address aligned to word boundary

REG is 8-bit word address (so e.g., sfr + 1 must be aligned).

W 117: normally RETN is used for NEAR procedures

W 118: normally RETS is used for FAR procedures

W 119: SFR accessed with unknown page or segment extension

An SFR from the standard or from the extended SFR-area is used as MEM operand within a page or segment extend block (EXTP, EXTPR, EXTS, EXTSR), but the page or segment number used as extension is not known at assembly time. The page number should be the system-page (page 3) and the segment number should be the system segment (segment 0). The warning can be ignored if the page or segment number is correct after locating.

W 120: procedure "*name*" contains no RETurn instruction

W 121: code label used in data section

W 122: data label used in code section

W 123: section is in the range of SFR's

W 124: register definition expanded by declaration with: *list_of_regnames*

One or more register declarations with registers not in this register definition were used in the assembly file. These registers are added to the declaration.

Example:

```
RGBNK REGBANK R0-R3  ; warning 124 will be issued on R4
      REGBANK R0-R4
```

W 125: used registers not in definition: *list_of_regnames*

The listed registers are used in the code but not in the register definition with the REGBANK, COMREG or REGDEF directive. The assembler adds them for the REGDEF directive.

W 126: read access to a write only system address

W 127: write access to a read only system address

W 128: read access to a write only system bit

W 129: write access to a read only system bit

W 130: a BYTE-GPR cannot hold values greater than DATA8

W 131: illegal pagelength, set to 60

The PAGELENGTH control must be supplied with a number between 20 and 255.

W 132: symbol-type of '*name*' already defined

Symbol has gotten a type more than once.

W 133: undefined and unused symbol '*name*'

A symbol typed by use of TYPEDEC was never defined nor used.

W 135: no section type was specified - default DATA is assigned

Default section type is DATA.

W 137: no procedure type was specified - NEAR is assigned

Default procedure type in non-segmented mode is NEAR.

W 137: no procedure type was specified - FAR is assigned

Default procedure type in segmented mode is FAR.

W 138: FAR procedures in NONSEGMENTED mode not necessary

FAR procedures in NONSEGMENTED mode are not necessary because the entire code is located in segment 0, so any jump or call can be NEAR.

W 140: TASK procedures and interrupt names are automatically declared GLOBAL

A public declaration of a TASK procedure or interrupt names is redundant.

W 141: output file not built in memory

a166 builds the object file in memory instead of building it on disk. This increases speed when seeking through the object file. When the object file in memory is finished, it is written to disk as a whole. When the assembler cannot allocate enough memory to build the object file in memory, this warning is issued and the file is built on disk, which increases assembly time.

W 142: the attribute of this read-only system address cannot be modified

W 143: the attribute of this write-only system address cannot be modified

W 144: nested extend instructions

One of the ATOMIC, EXTR, EXTS, EXTP or EXTPR instructions is used within the range of one of these instructions.

W 145: branch from extend instruction block

A branch from the range of one of the extend instructions ATOMIC, EXTR, EXTS, EXTP or EXTPR, causes a virtual extend instruction range. A branch instruction is only allowed as the last instruction of an extend instruction range.

W 146: code label in extend instruction block

A code label in the range of one of the extend instructions ATOMIC, EXTR, EXTS, EXTP or EXTPR, can cause an erroneous situation when a branch to this label is made.

W 147: return from extend instruction block

A return from the range of one of the extend instructions ATOMIC, EXTR, EXTS, EXTP or EXTPR, causes a virtual extend instruction range. A RET instruction is only allowed as the last instruction of an extend instruction range.

W 148: ENDP in extend instruction block

The ENDP is in the range of one of the extend instructions ATOMIC, EXTR, EXTS, EXTP or EXTPR.

W 149: DPP prefix used in page or segment extend block

When the EXTP, EXTPR, EXTS or EXTSR is in effect this warning is issued if an operand is used with a DPP prefix or assume, unless the POF (extended page) or SOF (extended segment) operator is used.

W 150: external DPP assignment has priority, assume on '*name*' ignored

An assume on an external is ignored if the external is declared with a DPP prefix: `EXTERN DPPx:label:type`

W 151: page or segment extend instruction used in NONSEGMENTED mode

An EXTP, EXTPR, EXTS or EXTSR instruction is used while $NONSEGMENTED is active and the model is not set to SMALL.

W 152: DPP prefix ignored

A DPP prefix (DPPn:) can only be used for instructions and for a DW. In all other situations the prefix is ignored.

W 153: possible conflict between jump chaining and PEC transfers. Target instruction might be erroneously fetched when $CHECKBUS18

When a PEC transfer occurs after a jump chain, where the last jump in the chain is a JMPR instruction that jumps backwards, the instruction at the target address will be erroneously fetched and executed. This happens the (n+1)th loop iteration (jump with cache hit) when in iteration n+1 no conditional jumps are taken nor an interrupt occurs nor a CALLS/CALLR/PCALL/JMPS/RETx instruction is executed.

This warning is generated when:

1. A JMPR instruction which jumps backwards is found at the same address as a label, indicating a jump chain and a loop.

2. And, between the target label and the JMPR instruction no CALLS/CALLR/PCALL/JMPS/RETx instructions nor any unconditional jumps/calls are found.

If the target of the JMPR instruction is not at a label position the intermediate instructions are not checked and the warning will be generated if the first condition is true.

Workaround: Use a JMPA instead of a JMPR instruction.

W 154: possible PEC address corruption in case of PEC transfer after this JMPS

When a PEC transfer occurs after a JMPS instruction, the PEC source address will be false. This warning is generated when a JMPS instruction is encountered that is not protected by an ATOMIC instruction earlier in the program.

Please check the *Erroneous PEC Transfers* section in the *CPU Functional Problems* appendix in the C Cross-Compiler User's Manual for a workaround for the ST_BUS.1 CPU functional problem. Check the errata sheet of the used ST10 derivative to determine whether it contains the ST_BUS.1 CPU functional problem.

W 155: bits set in OR data field that are not masked by AND mask

The BFLDH and BFLDL instructions allow bits to be set by the third operand even if those bits are masked by the second operand. This may not work properly in future processor derivatives. (Level 2 warning)

W 156: value of expression will be truncated if used in operation

Internally, the assembler keeps track of expressions in 32-bit format. However, if such a value is used in an operation, the linker/locator has no choice but to truncate the value until it fits in the space reserved for it by the assembler. This warning occurs only if a constant expression was found that exceeds the maximum magnitude for this variable type. If you want to refer to addresses, refer to labels instead of using a constant expression.

W 157: possible destruction of result of unprotected DIV

The XC16x/Super10 core has a problem with reading a core SFR register like PSW, MSW, MAH and MAE during a DIV(L)(U) instruction. The read operation can destroy the DIV(L)(U) result and so the DIV(L)(U) must be protected. This is done by the compiler using an ATOMIC #2 in front and a MOV Rx, MDL or MOV Rx, MDH after it. The ATOMIC prevents interrupts and the MOV stalls the pipeline until the division is finished. This warning only indicates that this sequence has not been encountered. That does not mean the problem actually occurs here, but you should inspect the code carefully and determine that manually.

W 161: unprotected MUL/DIV detected

Several cores have problems with the MUL and DIV operations. As a workaround, all MUL and DIV operations have to be protected by an ATOMIC sequence.

W 162: use of RETP with a CSFR

Use of the RETP instruction with a CPU SFR could cause problems in some C166S core derivatives. CPU SFRs are CP, SP, STKUN, STKOV, CPUCON1, CPUCON2, VECSEG, TFR, PSW, IDX0, IDX1, QR0, QR1, QX0, QX1, DPP, DPP1, DPP2 and DPP3.

W 163: possible BFLDx result corruption due to CPU21

The CPU21 problem occurs when a BFLDx instruction references the same address as a previous write operation or PEC transfer. To prevent PEC, use ATOMIC sequences.

If the previous operation was a write operation and the assembler cannot determine both the BFLDx reference and the write destination, this warning is generated as well.

W 164: ignoring *directive* directive while generating debug info

The compiler generates debugging info using ?FILE and ?LINE directives. When the assembler is instructed to generate debugging info with the ASMLINEINFO command, the compiler generated debugging info is disregarded.

Likewise, when ASMLINEINFO is not active, #line directives are ignored for generating debugging info. If you want to add line or file information inside **#pragma asm** blocks, you need to use #line directives. ?SYMB directives can be used inside and outside of **#pragma asm** blocks.

W 165: instructions found between *instruction* on line *line_number* and ENDP directive

Executable instructions were found between the last return or jump directive and the ENDP directive. Either this code can never be reached or it will fall through to the next procedure in the section. If this is intended, you can add a RETV instruction at the end or switch off this warning.

W 166: detected CPU.3 problem at end of EXTEND sequence

Early steps of the extended architecture core have a problem with the MOV Rn, [Rm + #data16] instruction at the end of an EXTEND sequence (EXTP, EXTPR, EXTS, EXTSR). In this case, the DPP addressing mechanism is not bypassed and an invalid code access can occur.

W 167: converting to bit value

A byte value is specified where a bit value was expected. The assembler tries to convert the value to the intended address.

W 168: using external class name in predefined variable

The ?CLASS_*name*_TOP or ?CLASS_*name*_BOTTOM predefined variables are used with a class name that is not defined in this module. The assembler assumes this is an external class name. The locator will issue an error when this class is not defined at that stage.

W 169: unprotected DIV detected

The C166S v1 architecture has a problem with DIV operations. When a DIV is interrupted and another DIV is executed inside the interrupt, the old state values of the division operation are overwritten, which will lead to a corrupted result. To avoid this, protect the DIV operation with atomic sequences.

W 170: explicitly modified SP register possibly not available

The C166S v1 processor architecture has a pipeline problem with the SP register. If the SP register is modified explicitly, the next two instructions cannot contain RETI, RETN, RETP or RETS, because they will read a corrupt SP value in the pipeline. Insert an extra NOP instruction. (Level 2 warning)

W 171: explicitly modified CP register possibly not available

The C166S v1 processor architecture has a pipeline problem with the CP register. If the CP register is modified explicitly, the next two instructions cannot contain any instruction that uses the CP to calculate a physical GPR address. Insert an extra NOP instruction. (Level 2 warning)

W 172: explicitly modified SP register possibly not available

The C166S v1 processor architecture has a pipeline problem with the SP register. If the SP register is modified explicitly, the next instruction cannot contain PCALL or CALLS, because they will read a corrupt SP value in the pipeline. Insert an extra NOP instruction. (Level 2 warning)

W 173: target of cached jump or RETP possibly using incorrect CP register

The C166S v1 processor architecture has a pipeline problem with the CP register. If the CP register is modified explicitly, the next two instructions cannot contain any instruction that uses the CP to calculate a physical GPR address. In the case of cached jumps, the target may be inserted into the processor pipeline early and be unable to use the correct CP value. (Level 2 warning)

W 174: target of cached jump or RETP possibly using incorrect SP register

The C166S v1 processor architecture has a pipeline problem with the SP register. If the SP register is modified explicitly, the next two instructions cannot contain RETI, RETN, RETP or RETS, because they will read a corrupt SP value in the pipeline. In the case of cached jumps, the target may be inserted into the processor pipeline early and be unable to use the correct SP value. (Level 2 warning)

W 175: target of RETP possibly using incorrect SP register

The C166S v1 processor architecture has a pipeline problem with the SP register. If the SP register is modified explicitly, the next instruction cannot contain PCALL or CALLS, because they will read a corrupt SP value in the pipeline. In the case of cached jumps, the target may be inserted into the processor pipeline early and be unable to use the correct SP value. (Level 2 warning)

W 176: instruction could cancel following software trap

The C166S v1 processor architecture has a problem with instructions that modify SP or PSW and subsequent software traps. The software trap is cancelled in that case and a wrong interrupt request is issued. The reported line contains an instruction that might be followed by a TRAP instruction. Please check this and insert an extra NOP instuction before this TRAP instruction if necessary. (Level 2 warning)

W 177: software trap possibly cancelled due to previous instruction

The C166S v1 processor architecture has a problem with instructions that modify SP or PSW and subsequent software traps. The software trap is cancelled in that case and a wrong interrupt request is issued. The reported line contains a TRAP instruction that might be preceded by an instruction that modifies SP or PSW. Please check this and insert an extra NOP instuction before this TRAP instruction if necessary. (Level 2 warning)

W 178: RETI not sufficiently protected by extend sequence

The C166S v1 processor architecture has a problem with RETI instructions which are not protected by an atomic or extend sequence of size 3 or 4. In case of two interrupts the first one may be lost although it may have a higher priority. Furthermore, the program flow after the ISR may be corrupted.

W 179: program flow after JMPR/JMPA might be broken

The C166S v1 processor architecture has a problem with JMPR and JMPA instructions. Any instruction following a conditional JMPR or JMPA might be fetched wrongly from the jump cache. See the Infinion documentation regarding CR108400: CPU_JMPRA_CACHE.

W 180: zero bytes have been filled out by DBFILL/DWFILL/DDWFILL

One of the instructions DBFILL, DWFILL or DDWFILL has been told to fill out zero bytes. (Level 2 warning)

W 181: control *name* is deprecated; EXTEND1 activated instead

This control is no longer in use. Instead, the EXTEND1 control implicitly activates this silicon bug program check. This control activates several extra checks on code problems due to the EXTEND1 processor architecture.

W 182: control *name* is deprecated

This control is no longer in use. It might disappear in a future revision of the assembler, in which case it will result in a syntax error. The assembler accepts the control, but it has no effect at this moment.

W 183: MDL accessed immediately after a DIV, DIVL, DIVU or DIVLU instruction

The C166S v1 processor architecture has a problem whereby PSW is set with wrong values if MDL is accessed immediately after a DIV instruction. See the Infineon documentation regarding CR108309.

W 184: *div/mul* instruction not protected after MDL/MDH modification

The C166S v1 processor architecture has a problem whereby wrong values are written into the destination pointer when a DIV or MUL instruction is interrupted and the previous instruction modified MDL or MDH. See the Infineon documentation regarding CR108904.

W 185: system address *address* is already defined

W 186: bit *address.bitpos* is already defined

W 187: SFR address *address* is already defined

W 188: memory mapped GPR used in potential local registerbank setting

The XC16x/Super10 extended architecture has local register banks that allow quick context switching. GPRs are not memory mapped in those local register bank contexts, so using for example a REG,MEM addressing mode where MEM is a GPR might not yield the expected results. (Level 2 warning)

W 189: redefinition of system identifier *name* would change value

When specifying register or bit definitions for system registers or bits it is not allowed to specify a different value than is used internally. The specified value is discarded and the internal value is used instead. Please see the manual section on the DEFR/DEFB directive for internal values of the registers and bits.

W 190: too few or too many rules specified in MISRAC control

The MISRAC control accepts a value that specifies the rule-status for up to 128 MISRAC rules. The control has insufficient digits or has too many digits for a correct specification. This may indicate that the control was generated incorrectly.

W 191: previous PEC access to GPR may cause corrupt program flow

The C166Sv1 architecture has a problem when a GPR is modified using a byte modification and a subsequent bit jump tests on the opposite byte of the same GPR. In that case, the program flow is corrupted and subsequent jumps may also take the wrong branch.

W 199: internal error: unexpected control

3 ERRORS (E)

E 200: illegal character

A character which is not allowed was found.

E 202: non terminated string

A class name is enclosed in single quotes and does not contain any spaces or new-lines. The second quote could not be found. It is missing or a space or new-line was found.

E 203: illegal character in numeric constant

The format of the number is not according to the base, a character was found not belonging to the base.

E 204: syntax error on token *name* in line *number*

A statement in the source file was not according the defined syntax.

E 205: SFR accessed with non-system page or segment extension

An SFR from the standard or from the extended SFR area is used as MEM operand within a page or segment extend block (EXTP, EXTPR, EXTS, EXTSR), but the page or segment number used as extension is not the system page (page 3) or system segment (segment 0).

E 206 : invalid PECC name '*name*'

The name is not a valid PECC name.

E 207 : forward reference to LIT symbol '*name*'

Forward references to LIT definitions are not allowed.

Example:

```
              DW   LITSYMBOL   ; not allowed
LITSYMBOL     LIT  '01h'
```

E 209 : illegal control '*name*'

The named control is not valid.

E 210: numerical argument expected for control '*name*'

The argument for the control was expected to be a number.

E 211: string argument expected for control '*name*'

The argument for the control was expected to be a string.

E 212: arithmetic overflow in numeric constant

The number was too long.

E 214: primary control '*name*' not valid at this place

Primary controls are only allowed at the beginning of the file before any general control, directive or instruction was seen.

E 215: missing quote '

An expected single quote was missing.

E 216: missing brace

An expected brace was missing.

E 218: empty string

An empty string was found which is not valid.

E 219: multiple LIT definition of '*name*'

The name was already defined.

E 220: LIT replacements nest too deep

The scanner tried to expand LIT replacements which would yield an expansion which is too large.

E 221: missing '}'

A '{' was found without a '}'.

E 222: undefined LIT name '*name*'

The partial string *name* is not defined with a LIT directive.

E 223: unrecoverable syntax error

The syntax error could not be recovered.

E 224: undefined symbol '*name*'

The symbol *name* was not defined.

E 225: too much pushed back on the stream

Because of long expansions of LIT replacement the scanner pushed too much characters back on the stream.

E 226: invalid PECC range

The range given with a PECDEF directive was not valid, the first PECC number was higher than the second.

E 227: invalid SSKDEF number

The stack size number with a SSKDEF must be 0, 1, 2 or 3.

E 228 : external '*name*' is not defined in current module and can therefore not be made PUBLIC or GLOBAL

An attempt was made to define a symbol which was already declared extern. Use another name for the symbol.

E 229: symbol '*name*' already defined

An attempt was made to define a symbol which was previously defined. Use another name for the symbol.

E 230: section name '*name*' is already defined as another symbol

The name was previously defined, but not as a section. Choose another name for the section.

E 231: ENDS without SECTION

An ENDS directive was found without a definition of a section by a SECTION directive.

E 232: ENDS/SECTION name mismatch section name was '*name*'

An ENDS directive was found with a name which is not the same as the section name with the previous SECTION directive.

E 233: sections nest too deep

The nesting of sections exceeded the maximum.

E 234: no ENDS directive

A SECTION directive was found but no ENDS directive was seen before the END directive.

E 235: too many classes

The number of classes exceeded the maximum.

E 236: class name '*name*' is already defined as another symbol

The name was previously defined, but not as a class. Choose another name for the class.

E 237: section type does not match original section definition

The section was previously defined with another section type.

E 238: align type does not match original section definition

The section was previously defined with another align type.

E 239: combine type does not match original section definition

The section was previously defined with another combine type.

E 240: class name does not match original section definition

The section was previously defined with another or no class name.

E 241: absolute address does not match original section definition

The section was previously defined with another AT address.

E 242: too many groups

The number of groups exceeded the maximum.

E 243: group name '*name*' is already defined as another symbol

The name was previously defined, but not as a group. Choose another name for the group.

E 244: group type does not match original definition

A group name was now type to be a CODE group while it was defined as a DATA group or vice versa.

E 245: '*name*' is no section name

The section used with the group directive was not defined to be a section.

E 246: the section type of '*name*' does not match the group type

The section was defined as a CODE section and is tried to be appended to a DATA group or vice versa. Or the section was of the type BIT.

E 247: section '*name*' is already grouped

The section was previously grouped by another group directive. A section can belong to only one group.

E 248: invalid register range

The range given with a REGDEF directive was not valid, the first register number was higher than the second.

E 250: no section for '*name*'

No current section is defined for the symbol.

E 251: expression too long

The expression consists of too many items to be evaluated.

E 252: expression syntax error

An expression in the source file was not according the defined syntax.

E 253: string in expression longer than 2 characters

A string in an expression must be 0, 1 or 2 characters.

E 254: division by zero

A division by zero was found in an expression.

E 255: absolute expression expected

The expression evaluated to a non absolute value.

E 256: value will not fit in byte

DB initialization with more than one byte of memory.

E 257: value will not fit in word

DB initialization with more than one word of memory.

E 258: operation invalid in this section

Directive cannot be used in current section.

E 259: external has invalid type

External defined with illegal type field.

E 261: trap number too large

Definition of "TASK" with a trap number outside the range of 0 - 127.

E 262: directive defined outside section

Directive should be defined inside section.

E 267: a relocatable or external symbol is not allowed as operand

The expression of an ORG directive contained externals or relocatables.

E 268: ORG directive cannot be used outside a section

ORG can only be used inside sections.

E 269: location counter below section base-address not allowed

The location counter must be above section base-address.

E 270: the EVEN directive is not allowed in a BIT section

EVEN directive cannot be used in a BIT section.

E 271: the EVEN directive is not allowed in a byte aligned section

EVEN directive cannot be used in a byte section.

E 272: DPP prefix expected

Initialization inside a not assumed section in segmented mode without use of a DPP register is not allowed.

E 273: type BYTE or WORD is expected for DPP-prefixed operand

Initialization of DPP-prefixed variables must be of type BYTE or WORD.

E 274: address *hexvalue* too high

An absolute section is not allowed with address outside the range:
0..0FFFFFFh

E 276: value of bit position out of range (0 - 15)

Bit position must be inside the range 0 - 15.

E 277: bits cannot be part of EQUate expressions

Expression following EQU cannot contain bits.

E 278: redefinition of equates is not allowed

EQU names cannot be redefined.

E 279: FAR PTR cannot be applied to constants

The segment number of constants cannot be determined, so a cast to far is not granted.

E 280: BIT PTR can only be applied to bits

Conversion to bits of labels and variables cannot be established by use of a type operator, therefore the operand of a BIT PTR must be a BIT variable.

E 281: SHORT operand has invalid type

Type of SHORT operand must be S_LAB (check on S_NEAR not done).

E 282: invalid symbol type detected

Reference of a TASK or CLASS name is not allowed.

E 283: segment offset not applicable to groups

If, at assembly time, a group is detected to be absolute, the assembler cannot determine the start address of the group because it is not known in which order the sections are located inside the group.

E 284: page offset not applicable to groups

If, at assembly time, a group is detected to be absolute, the assembler cannot determine the start address of the group because it is not known in which order the sections are located inside the group.

E 285: the same DPP register can only be used once in an ASSUME directive

DPP registers must be unique in the ASSUME directive.

E 286: nesting of procedures is not allowed

Procedures cannot be nested.

E 287: there is no corresponding PROC definition for this ENDP

An ENDP was detected without a corresponding PROC.

E 288: "*name*" is not the name of the actual procedure

Name of ENDP is not equal to the name of the corresponding PROC.

E 289: procedures can only be defined inside CODE sections

PROC directive was used inside a non-CODE section or outside a section.

E 290: only BIT, BYTE or WORD are valid data LABEL types

name: implies data label.

E 291: only NEAR or FAR are valid code LABEL types

name implies code label.

E 292: illegal operand combination

The virtual addressing modes could not be converted to existing actual addressing modes (e.g. MEM,MEM cannot be converted).

E 293: result of expression does not fit

DATA[*n*] cast on expression, which value does not fit in *n* bytes.

E 294: invalid type for a DATAn operator

Operand of DATAn operator must be a constant expression.

E 295: only one TASK procedure per module can be defined

E 296: invalid label type for bit section

E 297: labels can only be defined inside DATA or CODE sections

Labels cannot be defined outside of a CODE or DATA section.

E 298: bit label definition only allowed in BIT sections

A bit label definition was used in a section with a section type other than BIT.

E 299: a byte GPR is not allowed in word instructions

E 300: a word GPR is not allowed in byte instructions

E 301: an address in the bit-addressable ranges expected

E 302: address in non bit-addressable SFR area

E 303: absolute address out of range

E 304: illegal code alignment

E 305: page alignment expected

E 306: segment alignment expected

E 307: word alignment expected

E 309: bit alignment not allowed for this section

E 311: operand must be a bit variable

E 312: a bitword address or bitword number has to be word bound

E 313: mask value to large - must be in range 0 - 255

E 314: TRAP number too large

Trap number must be inside the range 0..7fh.

E 315: invalid PECDEF operand

E 316: CALL out of range

E 317: procedure defined outside the actual section

E 318: CALLA, PCALL or CALLR of a FAR procedure is not allowed

Use a CALLS for FAR procedures or labels or use a near label.

E 319: no inter-segment calls or jumps of/to NEAR labels allowed

E 320: invalid segment number

E 321: operand combination: *operand* invalid for this mnemonic

E 322: DDP[x] (x=0..3) must be used for page override

An invalid SFR register was used for a page override.

E 323: section boundary (length) overflow (underflow)

The value of DOTVAL goes outside the range that is allowed for the memory type of this section.

E 324: memory type '*name*' can only be used in non-segmented mode

LDAT and PDAT can only be used in non-segmented mode.

E 325: invalid page number: *hexnumber*

E 326: invalid segment number: *hexnumber*

A page or segment number was used which is outside the highest memory limit. This limit depends on the controls:

$SEGMENTED/$NONSEGMENTED

- select non-segmented (max. 64k) or segmented (max 256k or 16M) memory approach

$MODEL

- if the SMALL model is used $NONSEGMENTED also has 256k or 16M

E 327: invalid number of atomic instructions

The right operand of an ATOMIC, EXTR, EXTP, EXTS, EXTSR or EXTPR instruction is the number of atomic instructions. This number must be in the range 1 - 4. A relocatable is not allowed for this operand.

E 328: illegal type of bit position (has to be a number between 0 and 15)

E 329: JMP out of range - a relative displacement must be in the range -128 .. +127

E 330: an absolute bit number must be in the range 0 .. 2047

E 331: relative JMP to a FAR label is not allowed

E 332: an address in the bit-addressable SFR range expected

E 333: system addresses of the smallest configuration cannot be assigned by DEF

E 334: system address *hexnumber* is already defined - redefinition is not allowed

E 335: bit *hexnum.bitnumber* is already defined - redefinition is not allowed

E 337: SFR address *hexaddress* is already defined - redefinition is not allowed

E 338: invalid SFR address

E 339: address not at word boundary

Addresses must always be on word boundaries.

E 340: different DPP prefixes

A part of the expression contains a DPP prefix (or an EXTERN DPPn:.....) which is different from DPP prefix of the part at the other side of the operator.

Example:

```
DW  DPP1:labl2 + DPP2:0000h
```

E 341: no DPP assigned to system, cannot convert system address to MEM address

If in SEGMENTED mode a REG or bit offset is used as MEM operand, one of the DPPs needs to be assumed to SYSTEM or a DPPn: prefix should be used.

Example:

```
MOV  R0, SYSCON
```

The 'SYSCON' operand is converted to MEM, E 341 is not issued if e.g. the following line is placed before the MOV:

```
ASSUME DPP3:SYSTEM
```

E 342: REGBANK directive not allowed in absolute mode

In absolute mode, registers cannot be used because they are located by the locator.

E 343: only align type AT ... allowed in absolute mode

Relocatable sections in absolute mode are forbidden.

E 344: illegal address operation

The operation in the expression cannot be used for *address* types.

Address types are FAR, NEAR, WORD, BYTE, GROUP, BIT, BITWORD, REG. Constant types are DATAn and INTNO.

This message is issued when the following combination is used:

address-type operator address-type

Where *operator* is not -, ==, !=, >, < >=, <=, ULT, UGT, ULE, ULE.

Or when

operator address-type

is used and the *operator* is not one of SEG, SOF, PAG, SEG or BOF.

E 345: illegal RAM range - address has to be inside FA00 - FDFE

E 346: generated code exceeds the maximum number of 40 bytes per source line

The DB initializer string cannot exceed 40 characters.

E 348: double word alignment expected

E 350: type mismatch

Symbol already has a different type assigned.

E 351: bad argument of FLOAT control

The argument of the float control must be NONE, SINGLE or ANSI.

E 352: A RETurn instruction outside of a procedure is not allowed

A RETurn instruction outside of a procedure has no sense.

E 353: wrong RETurn mnemonic - for TASK procedures use RETI

The RETurn type for the actual procedure does not correspond with the procedure's type specified in the PROC definition.

This error message can be suppressed with the NORETCHECK control.

E 354: wrong RETurn mnemonic - for FAR procedures use RETS

The RETurn type for the actual procedure does not correspond with the procedure's type specified in the PROC definition.

This error message can be suppressed with the NORETCHECK control.

E 355: invalid operand type

E 356: expression result out of range for use in an instruction

E 357: PUBLIC / GLOBAL declaration of SET-constants not allowed

Due to the fact that SET symbols can be redefined they cannot be declared PUBLIC or GLOBAL.

E 358: wrong type of PUBLIC or GLOBAL symbol

A literal name cannot be made PUBLIC or GLOBAL.

E 359: redefinition of a relocatable SET symbol not allowed

SET symbols can be redefined as long as they are not relocatable.

E 360: date string too long

The date string is longer than 11 characters.

E 361: GPRs are not allowed in expressions

General purpose registers cannot be used in expressions.

E 362: only a BIT PTR can be applied to bits

A bit variable or a label was subject to a non-bit PTR operator.

E 363: illegal operand type for a PTR operation. Section-, group- and ext. constant-names are not allowed

PTR operator cannot be applied to a section, group or external constant name.

E 364: illegal bitbase detected

Combination of bitword with byte/word etc.

E 365: unknown memory model *name*

A memory model must be one of: NONE, TINY, SMALL, MEDIUM, LARGE or HUGE.

E 366: section-, group-, variable- or label-name expected

Assume on invalid symbol type detected.

E 367: instructions can only be used inside procedures

Instructions used outside procedures are not allowed.

E 368: extern not allowed on system addresses

The extern keyword was used on a system address defined with DEFA or on an assembler internal system address, such as SRCP0.

E 369: expression result out of range for *name*

Value operand of DS out of range

E 370: syntax error in invocation

A statement in the invocation or invocation file was not according to the defined syntax.

E 372: invalid bit constant

When the EXTSFR control is 'on', it is not possible to use a processor bit offset in the SFR range 080h..0F0h. Use the complete address or define the address with a DEFB directive.

E 373: SFR address used in extend SFR block

An SFR address NOT from the extended SFR area is used within the range of an EXTR, EXTPR or EXTSR instruction.

E 374: extended SFR address used outside extend SFR block

An SFR address from the extended SFR area is outside the range of an EXTR, EXTPR or EXTSR instruction.

E 375: COMMON register symbol '*name*' cannot be PUBLIC or GLOBAL

The symbol, defined with the COMREG directive or the REGDEF directive with a COMMON type, cannot be made PUBLIC or GLOBAL.

E 376: only one register definition per module

A register definition is done by the REGDEF or the REGBANK directive, if a register bank name is supplied. If no name is supplied, the directive indicates a register bank declaration. All declarations are matched against the single definition.

E 377: overlapping COMMON registers

One ore more registers are already defined as COMMON by a previous COMREG or REGDEF directive.

E 378: mac: repeat value too big

The repeat value of a MAC instruction is limited to 31 (5 bits). Repeat values up to 32768 can be obtained using the MRW register explicitly. Example:

```
MOV MRW, #1FFh
NOP
instruction
```

E 379: mac: invalid MAC SFR in addressing mode

One of the MAC SFRs in the addressing modes is illegal, probably a typo e.g. [IDX0 + QR1] instead of [IDX0 + QX1].

E 380: mac: invalid MAC register

The MAC register (e.g. MRW, MSW, MAL etc.) specified in this expression is not valid.

E 381: mac: instruction not repeatable

The instruction specified after the ”repeat #data5 times” expression is not repeatable, check the function and its operand combination.

E 382: scaling factor of this magnitude is not supported

The scaling factor provided for this task is not supported by the assembler.

E 383: the inline vector exceeds the maximum vector size with current scaling

The scaling defined for this module does not allow inline vectors of this magnitude. Either increase the scaling of this vector or decrease the code size.

E 384: condition code not supported by this instruction

The cc_(n)USRx condition codes are only supported for the JMPA(+/-) and CALLA(+/-) instructions. Use with other condition checking instructions is unsupported by the hardware.

E 385: CALLI and JMPI must be protected by ATOMIC

The XC16x/Super10 CALLI instruction requires an ATOMIC instruction directly in front of it, due to hardware requirements.

E 386: result will be corrupted due to CPU21

The CPU21 problem results in corrupted BFLDx results if the previous write operation references the same IRAM memory address as the mask (BFLDL) or data (BFLDH) short address.

E 387: duplicate names for common registers

Two common register definitions or declarations were found with the same name. This will cause combining errors in the linker/locator phase.

E 388: explicitly modified SP register not available

The C166S v1 processor architecture has a pipeline problem with the SP register. If the SP register is modified explicitly, the next two instructions cannot contain RETI, RETN, RETP or RETS, because they will read a corrupt SP value in the pipeline. Insert an extra NOP instruction.

E 389: explicitly modified CP register not available

The C166S v1 processor architecture has a pipeline problem with the CP register. If the CP register is modified explicitly, the next two instructions cannot contain any instruction that uses the CP to calculate a physical GPR address. Insert an extra NOP instruction.

E 390: software trap cancelled due to previous instruction

The C166S v1 processor architecture has a problem with instructions that modify SP or PSW and subsequent software traps. The software trap is cancelled in that case and a wrong interrupt request is issued. Please insert an extra NOP instruction before TRAP instructions.

E 391: control has been renamed to *control*

The control has been renamed. Please change your sources accordingly.

E 392: DPRAM address written back with wrong data

The C166S v1 processor architecture has a problem with JBC and JNBS when operating on bit addressable IRAM (DPRAM). In those cases, the memory content is corrupted, even if the jump is not taken.

E 393: Extend sequence elongated due to conditional jump

The C166S v1 processor architecture has a problem with extend sequences if a conditional jump is taken during that sequence. Due to pipeline injection, the effective range of the extend sequence is one instruction longer than expected. Insert a NOP instruction at the target address.

E 394: explicitly modified SP register not available

The C166S v1 processor architecture has a pipeline problem with the SP register. If the SP register is modified explicitly, the next instruction cannot contain CALLS or PCALL, because they will read a corrupt SP value in the pipeline. Insert an extra NOP instruction.

E 395: RETP in extend sequence detected

The C166S v1 processor architecture has a problem with calculating the address of the operand of an RETP instruction when that operand is an SFR or an ESFR, and the RETP instruction is the last instruction of an extend sequence. Please refer to the Infineon documentation regarding silicon bug number CR108361 also known as CPU_RETP_EXT.

E 396: DBFILL/DWFILL/DDWFILL cannot fill out a negative number of bytes/words/double words

A negative number of bytes/words/double words to fill out has been specified as the first operand of DBFILL, DWFILL or DDWFILL respectively.

E 397: SCXT reg, SP encountered

The C166S v1 processor architecture has a problem when the second operand of SCXT points to SP. In that case the new SP value rather than the old one is written to the first operand. See the Infineon documentation regarding CR108219.

E 398: illegal memory range - address has to be inside 0 - FFFFFE

E 399: illegal RAM range - address has to be inside C000 - FFFE

E 424: detected PEC interrupt after SRCPx/CP modification problem

The Infineon EWGold Lite architecture has a problem when two PEC interrupts occur while the PEC source register or the CP register is modified. This can lead to wrong PEC source values. The assembler detected a situation where this can potentially occur.

E 425: no MISRAC rules specified

The MISRAC control expects a value with the rule-status of selected MISRAC rules. This argument was not specified.

E 426: previous modification of byte GPR causes corrupt program flow

The C166Sv1 architecture has a problem when a GPR is modified using a byte modification and a subsequent bit jump tests on the opposite byte of the same GPR. In that case, the program flow is corrupted and subsequent jumps may also take the wrong branch.

E 500 - E 600: Reserved for gso166 error messages.

E 000 from gso166 maps on assembler error E 500;
E 001 from gso166 maps on assembler error E 501;
etc.

4 FATAL ERRORS (F)

F 400: user abort

The assembler is aborted by the user.

F 401: protection error: *message*

Error message received from ky_init.

F 402: too many errors

The maximum number of errors is exceeded.

F 403: cannot create "*name*"

Cannot create the file with the mentioned name.

F 404: cannot open "*name*"

Cannot open the file with the mentioned name.

F 406: read error while reading "*name*"

A read error occurred while reading named file.

F 407: write error

A write error occurred while writing to the output file.

F 408: invocation files nest too deep

The nesting of invocation files was too deep.

F 409: out of memory

An attempt to allocate memory failed.

F 410: parser: *message*

Parsing error.

F 411: cannot reopen '*name*'

The file *name* could not be reopened.

F 412: too many sections

The number of sections exceeded the maximum of 254.

F 413: input and output file name are identical

F 414: input and list file name are identical

F 415: input and errorprint file name are identical

F 416: output and list file name are identical

F 417: output and errorprint file name are identical

F 418: list and errorprint file name are identical

F 419: too many symbols

The number of symbols exceeds the maximum (16 million). This is an inherit limitation of the `a.out` object format. Try to reduce the number of labels that are exported or try the NOLOCALS control.

F 420: invalid instruction/addressing mode when $CHECKCPU16

F 421: too many relocation items

The `a.out` object format cannot handle more than 16 million relocation items per file. Try to use some absolute sections instead.

F 422: invalid instruction/addressing mode when $CHECKCPU1R006

The MOV (B) Rn, [Rm+#data16] instruction causes the CPU to hang when the source operand refers to program memory. The problem occurs in the C163-24D derivative.

F 423: input and SIF file name are identical

An attempt was made to overwrite the input file.

5 INTERNAL ERRORS (I)

The next errors are internal errors which should not occur. However if they occur, please contact your sales representative. Remember the situation and invocation in which the error occurs and make a copy of the source file(s).

I 497: *message*

I 499: internal error: general failure (*file*,*line*)

I 199: internal error: unexpected control

A166 ERRORS

APPENDIX H

LINKER/LOCATOR ERROR MESSAGES

TASKING

I APPENDIX

1 INTRODUCTION

This appendix contains all warnings (W), errors (E), fatal errors (F) and internal errors (I) of **l166**.

2 WARNINGS (W)

W 101: illegal character '*char*'

A character which is not allowed in the invocation was found.

W 102: output name renamed to '*name*'

A second TO <name> was found.

W 103: invalid characters in identifier '*name*'

An identifier must consist of the characters _underscore, A-Z, a-z or 0-9.

W 104: invalid number of symbol columns *number*, using *number*

The number of symbol columns must be 1, 2, 3 or 4.

W 105: TASK procedure '*name*' not found

The TASK procedure specified in the invocation is not found in the object files. Check if the name is correct and if the procedure is a TASK procedure.

W 106: TASK '*name*' not found

The TASK name specified in the invocation is not present in the object files. Check if the name is correct or if the TASK name is not already redefined with previous controls.

W 107: ADDRESSES RBANK: register bank not in internal RAM

A register bank address was located outside the internal RAM area. The ADDRESSES RBANK control is ignored.

W 108: no EXCEPT in PRINTCONTROLS

The EXCEPT with PUBLICS or NOPUBLICS in a print control is not allowed. The except is only valid for object controls.

W 109: module name '*name*' not unique

The module name found in the object file was already found in a previous read object file. Possibly linking or locating the same object twice.

W 110: section '*name*': private section multiply defined

A section with the name *name* was defined in two modules where one of these definitions was private.

W 111: CASE/NOCASE mismatch with *first_file*/(*first_module*)

The source files are assembled with different CASE/NOCASE controls. Linking these files may result in unexpected combinations or errors if the linker is invoked with the CASE control. Reassemble the source files with equal CASE/NOCASE controls.

W 112: existing system stack definition expanded

The module contains a SSKDEF with larger size than any previous module. The largest size is used.

W 113: existing system stack already defined with larger size

The module contains a SSKDEF with smaller size than any previous module. The largest size is used.

W 114: PECDEF combined

The currently linked module contains PECDEF directive which is different from the PEC channels defined in previous linked modules.

W 115: group '*name*': group expanded with different type

The group *name* was defined with different CODE/DATA attribute. A CGROUP directive must be changed to DGROUP in the assembly source file. Or a different grouping must be chosen.

W 116: task name '*name*' not unique

The task name found in the object file or on the command line was already used for another task.

W 117: symbol '*name*': external multiply defined with type mismatch

The external symbol *name* is defined with different types. Take care that the types are equal. The symbol will get the type of the symbol which was read first.

W 118: symbol '*name*': unresolved

No public or global symbol definition was found to resolve the symbol. This is the linker message. Unresolved externals are allowed to remain after linking.

W 119: symbol '*name*': external/public type mismatch

A symbol was resolved with a mismatch between the type of the public definition and the external declaration in another module. Take care that both types are equal. The symbol will get the type of the PUBLIC symbol.

W 120: symbol '*name*': external/global type mismatch

A symbol was resolved with a mismatch between the type of the global definition and the external declaration in another module. Take care that both types are equal. The symbol will get the type of the GLOBAL symbol.

W 121: taskname multiply defined

The task was already defined. This definition is ignored.

W 122: interrupt number already defined

The interrupt was already defined. This definition is ignored.

W 123: private registers multiply defined

There are several private register definitions.

W 124: private register definition '*name*' combined with definition in *name*

Definitions of the same name are combined and expanded.

W 125: illegal pagewidth

The pagewidth must be between 78 and 255.

W 126: *number* symbol columns will not fit within the pagewidth, using *number* columns

The number of columns specified by the SYMBOLCOLUMNS control will not fit in the specified page width. The number of columns is adjusted to the page width.

W 127: environment variable '*name*' not set

When a *$name* or *${name}* is found in the invocation, **l166** starts reading the invocation from the environment variable *name*. If this environment variable is not set in your current command shell of the operating system, **l166** will issue this warning.

W 128: SEGMENTED/NONSEGMENTED mismatch with *firstfile*/(*firstmodule*)

The source files are assembled with different SEGMENTED/NONSEGMENTED controls. Linking these files possibly will yield unexpected results. Reassemble the source files with equal SEGMENTED/NONSEGMENTED controls.

W 129: RENAMESYMBOLS *name*: symbol '*name*' not found

The symbol which has to be renamed was not found or was not found with the expected type

W 130: missing system stack definition

No definition of the system stack was found in one of the object files.

W 131: interrupt name '*name*' on command-line overrides '*name*' in object file

The interrupt name on the command line will be used, even if the task defines another name.

W 132: task name '*name*' on command-line overrides '*name*' in object file

The task name on the command line will be used, even if the task defines another name.

W 133: interrupt number *number* on command-line overrides *number* in the object file

The interrupt number on the command line will be used, even if the task defines another number.

W 134: missing register definition

Add register definition to your input source file.

W 135: *name* element overlaps previously reserved element

The mentioned element overlaps an element reserved by the RESERVE control.

W 136: ORDER GROUPS control: cannot locate group order starting with group '*name*'

The order as indicated by ORDER GROUPS control cannot be located.

W 137: class '*name*' overrides '*name*' for group '*name*'

The sections in a group should have the same class. If not the class of the last section will be used.

W 138: ADDRESSES control: section '*name*' already absolute (control ignored)

The section indicated by the ADDRESSES control was already defined as an absolute section in the assembly source, or by a previous ADDRESSES control.

W 139: ADDRESSES control: group '*name*' already absolute (control ignored)

The group indicated by the ADDRESSES control was already defined as an absolute group by a previous ADDRESSES control.

W 140: *control*/NO*control* mismatch with *first_file*/(*first_module*)

The source files are assembled with different EXTEND/NOEXTEND controls. If they are intentionally assembled this way, you can ignore this warning, otherwise you should disassemble the source files with equal EXTEND/NOEXTEND controls.

W 141: overlapping memory ranges '*name*' and '*name*'

The two elements will have overlapping areas. Check all absolute addresses including the ADDRESSES control. See the created map file for more information.

W 142: reserved area overlaps previously reserved area

Two areas indicated by the RESERVE control have overlapping parts. Both areas will be marked as reserved. Adjust the ranges with the RESERVED control.

W 143: PECC*n* already defined in other task

The PEC channel in the located module is already defined by a PECDEF directive in one of the modules located before this module The order of locating is the order of the modules in the invocation.

Check the PECDEF directives in the modules.

W 144: *control* control: class name '*name*' not found

The class name was not found in the object file. The control will be ignored.

W 145: *control* control: section name '*name*' not found

The section name was not found in the object file. The control will be ignored.

W 146: *control* control: group name '*name*' not found

The group name was not found in the object file. The control will be ignored.

W 147: *control* control: section name '*name*' not in class '*class_name*'

The section did not belong to the class mentioned in the ORDER control. The ORDER control will be ignored.

W 148: ORDER control: section '*name*' has different group

The group of the section ordered by the ORDER control did not match previous section in the order. The ORDER control will be ignored.

W 149: ORDER control: section '*name*' has different class

The class of the section ordered by the ORDER control did not match previous section in the order. The ORDER control will NOT be ignored.

W 150: ORDER control: invalid order caused by section '*name*'. ORDER control ignored

The named section caused an error. For example:
- section appears more than once in an order control.
- conflict with previous order control.

The ORDER control will be ignored.

W 151: ORDER control: group '*name* multiply ordered

The named group appears more than once in an order control. The ORDER control will be ignored.

W 152: CLASSES control: class name '*name*' not found

The class name was not found in a object file. The CLASSES control will be ignored for this class.

W 153: CLASSES control: class '*name*' multiply used.

The class name was used more than once within a CLASSES control. The first occurrence of the class will be used. Check the CLASSES control in the invocation.

W 154: CLASSES control: address range (*hexnum*, *hexnum*) overlaps another address range in a CLASSES control

The CLASSES controls have overlapping ranges. Check the CLASSES control in the invocation.

W 155: ASSIGN control: symbol '*name*' not found as an external

The symbol assigned by the ASSIGN control was not found as an external in one of the objects. Check the invocation.

W 156: ORDER control: section name '*name*' not in group '*name*'

The section did not belong to the group mentioned in the ORDER GROUPS control. The ORDER control will be ignored for this section.

W 157: system stack defined by both SSKDEF directive and SYSSTACK sections

System stack must be defined by either a SSKDEF directive or SYSSTACK sections.

W 158: ADDRESSES LINEAR: address *hexnum* too low

An address lower than 010000h (page 4) for the linear (LDAT) sections is not allowed. An exception is address 0000000h, which is the default.

W 159: interrupt for this task multiply defined, using interrupt *namenumber*

The locater encounters more than one interrupt record in the object file while the STRICTTASK control is set. Only one interrupt per module is allowed when this control is set.

The explanation for message W 160 - W 170:

The next messages concern not fitting relocations. The calculated value does not fit in the number of bits as indicated. Adjust the expression responsible for the relocation.

Example: using in the assembly a line like

```
MOV  R0, #lab + 20000h
```

Causes W 161 because lab + 20000h does not fit in 16 bit (1 word)

W 160: section '*name*', location *hexaddress*: value *number* does not fit in one byte

W 161: section '*name*', location *hexaddress*: value *number* does not fit in one word

W 162: section '*name*', location *hexaddress*: bad segment number *hexnumber*

W 163: section '*name*', location *hexaddress*: bad page number *hexnumber*

W 164: section '*name*', location *hexaddress*: bit offset *hexnumber* does not fit

W 165: section '*name*', location *hexaddress*: bad trap number *hexnumber*

W 166: section '*name*', location *hexaddress*: value *hexnumber* does not fit in 3 bit

W 167: section '*name*', location *hexaddress*: value *hexnumber* does not fit in 4 bit

W 168: section '*name*', location *hexaddress*: bit address *hexnumber* does not fit

W 169: section '*name*', location *hexaddress*: bad page number *hexnumber* in expression

W 170: section '*name*', location *hexaddress*: bad segment number *hexnumber* in expression

W 171: SECSIZE control: negative size for section '*sectname*'*class*

Due to SECSIZE control, the size of the mentioned section becomes lower than zero. The size is set to zero. The section size can be negative when the SECSIZE(*sectname*(- *value*)) is used, where the value is subtracted from the original size. When *value* is higher than the original section size, the section size becomes negative.

W 172: no input module

No input modules were found in the invocation.

W 173: cannot order section '*name*'; ORDER control ignored

Check absolute sections within the order.

W 174: absolute order with section '*name*' cannot be located; ignoring ORDER control

There is no space left in the processor memory to locate the order.

W 175: [NO]PUBLICS EXCEPT control: symbol '*name*' not found

The symbol in the PUBLICS EXCEPT or NOPUBLICS EXCEPT control is not found in any of the object modules

W 176: SECSIZE control: size of section '*name*'*class* decreased

Decreasing the size of a section can destroy its contents.

W 177: SECSIZE control: section '*name*'*class* not found

The named section was not found in the task.

W 178: private register declaration extends definition '*name*' in *name*

The declaration in the module contains registers not included in the definition of the register bank.

W 179: private register declaration extends declaration in *name*

The declaration in the module contains registers not included in the definition of the register bank. Note: this warning is by default disabled. Use the WARNING(179) control to enable the warning.

W 180: mismatch in expected count on warning W *number*

The number of counts on the warning which was expected as stated by the WARNING EXPECT control was not equal to the actual number of counts.

W 181: registerbank on odd address *hexaddress* not allowed; aligning to even address

The address of a register bank must be an even address. Assigning an odd address to the bank with the ADDRESSES RBANK control will cause this message to be issued.

W 182: [NO]PUBLICS EXCEPT control: symbol '*name*' not public

The symbol in the PUBLICS EXCEPT or NOPUBLICS EXCEPT control is found, but not as a public symbol. The symbol is extern or global.

W 183: output file not build in memory

The size of the object file was to big to be allocated in one time. The file will be created on disk and not first in memory. This causes the linker/locator to be slower; it has no effect on the final output.

W 184: register bank already absolute

The register bank was already made absolute by an ADDRESSES RBANK control. The first assignment is used.

W 185: linear base address already set

The linear base address was already set by an ADDRESSES LINEAR control. The first assignment is used.

W 186: SETNOSGNPP control: '*name*' was previously assigned to page *number*

The new value for the DPP is used.

W 187: system stack definition 7 overruled by *number*

A system stack definition of 7 indicates the entire internal RAM is used as system stack. The locator will not reserve this space but expects the usage of SYSSTACK sections. If a system stack definition in the range 0 - 4 is used in an other module, this definition is used.

W 188: system stack size decreased: definition *number* overruled by *number* in invocation

The system stack number supplied with the control RESERVE(SYSSTACK()) overrules the number in the object file, defined with the assembler directive SSKDEF. This warning is issued if the stack size is decreased.

W 189: expecting system stack sections for system stack definition 7

When the system stack definition is set to 7 by the assembler SSKDEF directive or the locator RESERVE(SYSSTACK()) control, you need to define the system stack by means of SYSSTACK sections.

W 190: OVERLAY control: class name '*name*' not found

The class name was not found in an object file. The OVERLAY control will be ignored for this class.

W 191: OVERLAY control: class '*name*' multiply used.

The class name was used more than once within the OVERLAY control. Only one occurrence of the class will be used. Check the OVERLAY control in the invocation.

W 192: *control* control: no LDAT sections found

One of the ADDRESSES LINEAR or SETNOSGDPP controls is used, but no LDAT sections were used in the object modules. Both controls affect the location of LDAT sections. The control is ignored.

W 193: class '*name*' without CLASSES control

If the CHECKCLASSES control is active each class must have a range specified with the CLASSES control. The locator will not check if each class has a CLASSES control, if the NOCHECKCLASSES control is set or when the MEMORY ROM or MEMORY RAM control is set.

W 194: ADDRESSES RBANK: register bank '*name*' not found

The register bank name specified with the ADDRESSES RBANK control is not found in the input modules.

W 195: *control* control: section '*name*' multiple in input module(s), using first occurrence

The section was found more than once in the current input module or in the input modules when the control is general. Note that module scope controls can be general when the GENERAL control or scope switch is used. The first occurrence of the section in the first input module is used. Note the library modules are read after all other modules.

W 196: *control* control: group '*name*' multiple in input module(s), using first occurrence

The group was found more than once in the current input module or in the input modules when the control is general. Note that module scope controls can be general when the GENERAL control or scope switch is used. The first occurrence of the group in the first input module is used. Note the library modules are read after all other modules.

W 197: ORDER SECTIONS control: cannot locate order starting with '*name*'

The sections cannot be located in the order specified with the ORDER SECTIONS control. The ORDER control will be ignored.

W 198: *name* does not fit into the lower 64K. Switching to SND memory configuration

When using the `_at()` keyword in the small memory model to place a variable outside the lower 64K range, you should add the `_far` keyword or use the SND memory configuration.

W 199: same page assigned to DPP*n* and DPP*m*

When using the SND control, the same page is assigned to two different DPP registers.

W 500: page *number* assigned to DPP*n* due to absolute near section

When using the `_at()` keyword in the small memory model to place a variable outside the lower 64k range, the correct page must be assigned to the correct DPP register.

W 501: value 0x*hexnumber* has been resolved as DPP*n*:0x*hexnumber*

The RESOLVEDPP keyword forces the locator to try and find a base DPP register able to address values. This warning indicates that such a value has been found and resolved succesfully. This does not mean this was supposed to happen; non-address values are not supposed to be referenced through a DPP register. Check these warnings carefully. Use the SETNOSGDPP control to set the base DPP registers to the desired settings.

W 502: value 0x*hexnumber* could not be resolved using a DPPx register

The RESOLVEDPP keyword forces the locator to try and find a base DPP register able to address values. In this case, a value was encountered for which no suitable base DPP address could be found. This does not mean this is wrong, because non-address values should not be reference through a DPP register.

Use the SETNOSGDPP control to set the base DPP registers to the desired settings.

W 503: linking empty heap section

When dynamic memory allocation routines from the library are used, a heap section is created by default, but of size 0. The section size can be adjusted in the locate stage also, to allow for run-time memory allocation without running out of near heap space.

W 504: code section *name* (partially) located in data page 2/3 by the user

The XC16x/Super10 architecture does not allow executable code to be located inside data page 2 and 3 (00'8000h TO 00'FFFF). As long as this code is never executed, locating the code there will not pose problems. This code could, for example, be moved at run-time to another location.

W 505: vector table address at 0*hexnumber*h not aligned on segment boundary

The XC16x/Super10 architecture allows the vector table to be located elsewhere in memory, but it must be at a segment boundary and not in segment 191. Relocating the vector table to a non-aligned address is only allowed when using it for debugging purposes. A non-debug vector table must always be aligned at a segment boundary.

W 506: scaling of vector tables differs between modules

Seperate modules declared a different scaling for the vector table. The locator will use the largest scaling declared, or the scaling declared on the command-line if that is larger. This warning is only generated when no scaling is defined on the command-line and two or more modules declare a different scaling.

W 508: maximum number of configurable groups is 255

W 509: maximum number of configurable classes is 255

W 511: minimum number of configurable groups is 1

W 512: minimum number of configurable classes is 1

W 513: control *name* is deprecated

This control has no effect anymore. It is supported for backwards compatibility, but in the future it may cause a syntax error.

W 514: userstack section *name* is truncated to *number* bytes

The linker / locater will automatically truncate a userstack section to the maximum value allowed for this type of section.

W 515: section *section* is removed, because it is never used

With the smart linking control in effect, the linker/locator tries to identify sections that are never used. Together with the compiler smart linking pragma which will put all functions in a seperate section, this eliminates unused functions from the output file.

W 516: resolving *variable*, but *control* control not specified

Some predefined variables must be accompanied by certain controls. For example, the ?USRSTACK1_TOP predefined variable is an EXTEND2 architecture variable. The locator will resolve this variable but other effects of the missing control will not be applied. This may result in a non-executable output file.

W 517: using existing definition of *symbol*

With the RENAMESYMBOLS control, existing symbols can be renamed. If the locator finds a definition of a predefined symbol which may be the result of RENAMESYMBOLS, it does not create a new symbol with that name, but uses the existing value. This can be used to define your own user stack location.

W 518: page *number* assigned to DPPx

When LDAT sections are used, but the DPPs are not set using ADDRESSES(LINEAR) or SETNOSGDPP, the locator will guess values for the DPPs based on the memory specification. This warning is generated if it determined values other than the defaults and serves to report the values found in the process

W 519: memory size insufficient to set DPPs

A page number was determined based on the ROM and RAM memory ranges, but the memory size is insufficient to address that page. Use the MEMSIZE control to extend the available memory.

W 520: PEC area already reserved in IO-RAM area

The PEC pointer area is part of the IO-RAM area in EXTEND2 architectures. This is already reserved when the EXTEND2 control is used. There is no need to specify additional PEC pointer reservation.

3 ERRORS (E)

E 200: name too long

The length of a name in the invocation exceeded the limit of 128 characters.

E 201: non terminated string: missing '.

A class name is enclosed in single quotes and does not contain any spaces or new-lines. The second quote could not be found. It is missing or a space or new-line was found.

E 202: number too long

The length of a number in the invocation exceeded the limit of 128 digits.

E 203: digit exceeds radix

The format of the number is not according to the base, a character was found not belonging to the base.

E 204: syntax error

A statement in the invocation file was not according the defined syntax.

E 205: brace mismatch

A required brace was missing.

E 206: too many excepts

The number of excepts exceeds 40.

E 207: invalid file extension in '*name*'

The extension must be .lib or .obj for linking and .lno for locating.

E 208: mixed single precision and ANSI floating point

The FLOAT control of the assembler is used to indicate which floating point type is used, single precision (FLOAT(SINGLE)) or ANSI (FLOAT(ANSI)). The 166 C-compiler sets this control if floating point was used in the C source:

$FLOAT(SINGLE) if the source is compiled with **–F**

$FLOAT(ANSI) if the source is not compiled with **–F**

Using mixed floating point types is not possible. This error message is issued if the float control of the current module is not equal to the float control of previous modules. The error message is not issued if:

- no floating point is used
- all modules are compiled without **–F** and the C library with ANSI floating point is used (c166?.lib)
- all modules are compiled with –F and the C library with single precision floating point is used (c166?s.lib)

E 209: module scope *name*: file not in invocation

The filename in the module scope switch is not found in the list of input files check if the filename exactly matches the name as entered before. Note that when the filename does not have a suffix it will be added by **l166**. the linker stage will add .obj and the locator stage will add .lno.

A module scope switch has the following syntax: {*filename*}
A temporary module scope switch has the following syntax: {*filename* ... }

E 209: no controls allowed in task definition

No controls are allowed between INTNO, TASK and object filename.

E 210: no object file defined for *control* control

A control affecting a single object file was used while no object file was defined.

E 211: invalid address range

An address range (address1, address2) with address1 higher than address2 was detected.

E 212: invalid PECC name '*name*'

The name is not a valid PECC name.

E 213: invalid interrupt number

Interrupt number is not valid.

E 214: invalid SYSSTACK value

The value with the SYSSTACK control must be in the range 0–3. If the assembler EXTSSK control is set the value can also be 4 or 7.

E 215: section '*name*': combining different combine types

A section with the name *name* was defined in another module with another combine type.

E 216: section '*name*': combining different memory types

A section with the name *name* was defined in another module with another memory type (DATA, LDAT, HDAT, PDAT, CODE, BIT).

E 217: section '*name*': combining different align types

A section with the name *name* was defined in another module with another align type.

E 218: ADDRESSES RBANK: no bank name allowed when STRICTTASK is active

When the STRICTTASK control is set only one register bank per input module is allowed and only the syntax 'ADDRESSES RBANK(value)' is valid. The syntax 'ADDRESSES RBANK(name(value), ...)' is not accepted in that case.

E 219: SEGMENTED/NONSEGMENTED mismatch with *first_file*(*first_module*)

The source files are assembled with different SEGMENTED/NONSEGMENTED controls. Linking these files possibly will yield unexpected results. Reassemble the source files with equal SEGMENTED/NONSEGMENTED controls.

E 220: *control*/NO*control* mismatch with *first_file*(*first_module*)

The source files are assembled with different EXTEND/NOEXTEND controls. Linking or locating these files possibly will yield unexpected results. Reassemble the source files with equal EXTEND/NOEXTEND controls.

E 221: message number *number* is not a warning or does not exist

The message with the mentioned number does not exist or is not a warning (W *number*). It cannot be disabled or enabled with the WARNING control.

E 222: symbol '*name*': unresolved

No global symbol definition was found to resolve the symbol while locating

E 223: section '*name*': intra segment JMP or CALL at location *hexaddress* crosses segment border

The address calling to is not in the same segment as the location of the instruction.

E 224: illegal combination of local and PUBLIC or GLOBAL register bank '*name*' in *name* and *name*

The mentioned register bank is in one of the module a local register bank and in the other module the bank is made GLOBAL or PUBLIC. The linker can only combine register banks with equal names if they are local.

Example:

```
Object file 1 has:    bank1   REGBANK R0-R15
                              PUBLIC  bank1
Object file 2 has:    bank1   REGBANK R0-R15
```

E 225: bad combination of common registers '*name*' and '*name*'

This error is issued when two COMMON register ranges with different names have an overlapping range in one task. Example:

```
Object file 1 has:    COM1 COMREG R0-R3
Object file 2 has:    COM2 COMREG R2-R4
```

When these two objects are linked the register ranges cannot be combined to one bank.

E 226: bad combination of private/common registers in '*name*'

Avoid overlapping of private and common register banks.

E 227: expression syntax error

An invalid expression was found in the invocation

E 228: section '*name*' already belongs to group '*name*'

The section is grouped in this object file to another group than it was previously grouped.

E 229: bad expression relocation

The relocation of an expression did not have the right format. This is possibly due to assembly errors.

E 230: too many bytes in relocatable expression

This error is caused by a badly formatted object file. Try to assemble the assembly source file again.

E 231: index in symbol table out of range

Caused by a bad formatted object file. Assemble your assembly source again and check for errors.

E 232: relocation record error

Caused by a bad formatted object file. Assemble your assembly source again and check for errors.

E 233: section '*name*': section base mismatch: header *hexnumber*, symbol *hexnumber*

The section base address in the header record of the section does not match the address found in the symbol record of the section. This is probably due to errors during assembly or due to internal errors of assembler or linker.

E 234: cannot solve nested equate '*name*'

The symbol, defined with one of the assembler EQU, SET or BIT, cannot be solved probably due to an invalid nesting of the symbol. Example:

```
AA   EQU   BB
BB   EQU   AA + 5
```

Cannot be solved.

E 235: section '*name*': combination exceeds page size

Reduce the size of this DATA/BIT section.

E 236: section '*name*': combination exceeds segment size

Reduce the size of this CODE section.

E 237: ASSIGN control: public symbol '*name*' multiply defined.

An assign control introduces a symbol which is already defined in one of the object or library modules.

E 238: section '*name*', location *hexaddress*: value *hexnum.num* is not in the bitaddressable range.

The result of a relocation for a bit value was not in the bitaddressable range.

E 239: memory model *name*: conflict with previous modules in memory model *name*

The memory models of the linked or located objects have to be equal.

E 240: ADDRESSES RBANK: *name* has more than one register bank

E 240: ADDRESSES RBANK: more than one register bank

The ADDRESSES RBANK control was used in the syntax 'ADDRESSES RBANK(value)' but he current module contains more than one register bank definition. The locator does not know to which bank the address should be assigned. Use the syntax 'ADDRESSES RBANK(name(value),...)' for assigning each register bank to an absolute address.

The second format is issued when no module scope is set and the total number of register banks in the modules is more than one. No module scope is set when the GENERAL (abbr. GN) control is used or between the LOCATE control and the first file name.

E 241: BIT section '*name*': too large

The size of a BIT section must be lower than 0800h (bits). Decrease section size.

E 242: BIT section '*name*': calculated base address *hexaddress* (bit) out of range

The bit address calculated by the linker was out of the range 0h - 0ff0h Causes can be: an invalid ORG directive, an invalid base address, or an internal error.

E 243: symbol '*name*': multiply defined

The symbol *name* is multiply defined as public or as global. Remove the multiple public.

E 244: interrupt symbol '*name*': multiply defined

The symbol *name* is multiply defined as public or as global. Remove the multiple public.

E 245: common register area '*name*' has mismatching length

The named area was previously defined with another length. Check common register definitions.

E 246: private registers (*name*/*name*) will overlap

The overlaying of the common registers is not possible. Check common and private register definitions.

E 247: common register areas (*name*/*name*) will overlap

The overlaying of the common registers is not possible. Check common and private register definitions.

E 248: common register area and private registers will overlap (*name*/*name*)

The overlaying of the common registers is not possible. Check common and private register definitions.

E 249: cannot combine COMMON register area '*name*'

The combination of register banks failed. Addresses could not be assigned. Check your register definitions. The given name is an indication of the common register range causing this error.

E 250: cannot assign addresses to register banks

Addresses could not be assigned. Check your register definitions and the addresses supplied via the ADDRESSES control.

E 251: invalid *name* range

The RESERVE or MEMORY control was called with a range addr1 - addr2 where addr2 was lower than addr1. The range can be an MEMORY range, INTTABL range or PECPTR range for the RESERVE control. It is a RAM or ROM range for the MEMORY control.

E 252: interrupt number *number* is multiply used

The named interrupt number is used for more than one task. Check your source files and the invocation of the locator.

E 253: missing interrupt number for task *name*

The task must be supplied with an interrupt number.

E 254: relocation: expression stack overflow

The expression read for relocation was not correct. The assembler possibly generated a bad expression. Check for assembly errors.

E 255: relocation: expression stack underflow

The expression read for relocation was not correct. The assembler possibly generated a bad expression. Check for assembly errors.

E 256: relocation: unknown operator (*hexnumber*) in expression

The expression read for relocation was not correct. The assembler possibly generated a bad expression. Check for assembly errors.

E 257: unknown predefined symbol '*name*'

The named symbol (starting with a question-mark '?') in not known by the locator. The assembler should check for valid symbols. Check for assembly errors.

E 258: address (*hexaddress*) too high

The address was outside the processor memory.

E 259: expected range specifier missing

A range was expected : expression - expression.

E 260: task '*name*' not found

You tried to specify a section or group from a certain task by using the optional 'TASK(*taskname*)' specifier, but the taskname is not found in the invocation or in one of the object files. A taskname can be defined with the assembler 'PROC TASK *taskname*' directive, or with the locator TASK control. The 'TASK(*taskname*)' specifier can be used in the ORDER control, in the ADDRESSES SECTIONS or in the ADDRESSES GROUPS control.

E 261: section '*name*', location *hexaddr*: division by zero in relocatable expression

A relocatable expression contained a division by zero. Check the expression used in the section at the indicated location.

E 262: invalid stack size *hexsize*

The stack size used with a FPSTACKSIZE control must be in the range 0 to 3fe0h (one page - 32 bytes).

E 263: no bit address allowed for this control

The address for this control cannot be a bit address.

E 264: invalid bit position *number*

The .bitpos must be between 0 and 15

E 265: address *hexnum.num* not in bitaddressable area

An address containing a . must be in the bitaddressable area.

E 266: *type* bit element '*name name*' cannot be located in bitaddressable area

There is no space left in the processor memory for locating the mentioned bit element.

E 267: *type* system stack element '*name name*' cannot be located in system stack area

There is no space left in the processor memory for locating the mentioned system stack element.

E 268: *type* linear element '*name name*' cannot be located within 4 pages

There is no space left in the processor memory for locating the mentioned linear (LDAT) element. Note that an LDAT section is paged when the SND control is used, and that it can be 3 pages + 1 page linear when ADDRESSES LINEAR is used (default).

E 269: *type* nonsegmented element '*name name*' cannot be located in first 64k segment

There is no space left in the processor memory for locating the mentioned nonsegmented element.

E 270: *type* segmented element '*name name*' cannot be located

There is no space left in the processor memory for locating the mentioned segmented element.

E 271: *type* register bank '*name*' cannot be located in internal memory

There is no space left in the processor memory for locating the mentioned register bank.

E 272: cannot locate absolute element '*name*' at 0x*hexnumber*

There is no space left in the processor memory for locating the mentioned element.

E 273: address *hexaddr* for section '*name*' is not in the bit addressable area

The section appears to have an absolute address outside the processor bitaddressable area.

E 274: bit address *hexaddr* found for not BIT section '*name*'

The section is not of the type BIT but is aligned to an address having a bit position.

E 275: module '*name*' not found in library

The extraction of the module from the library as specified in the invocation failed because the module was not found in the library

E 276: invalid heap size *hexsize*

The heap size used with a HEAPSIZE control must be in the range 0 to 3fffh (one page) in non segmented mode or 0 to 01000000h in segmented mode. The size must be even, because the heap section is word aligned. If two sizes are specified, the first must be within one page and the second lower than the maximum memory size.

E 277: section '*name*' with a global combine type has different class attribute

Sections with equal names and a global combine type must have equal class attribute.

E 278: COMMON section '*name*' has different sizes

Sections with equal names and combine type COMMON must have equal sizes. Not equal sizes indicate different sections.

E 279: section '*name*': combining different class attributes '*name*' and '*name*'

Sections with equal names cannot be combined if the classes are different.

E 280: module '*name*' is not a TASK module

The TASK control cannot be used for modules containing none or more than one TASK procedure. Please use the INTERRUPT control to assign TASK names, interrupt names and interrupt numbers.

E 281: ADDRESSES control: start address of section '*name*' is not aligned

The start address of a section as to aligned as stated by the section align type.

E 282: data group '*name*' cannot be located in one page

E 283: code group '*name*' cannot be located in one segment

The locator failed to locate all sections of the data/code group in one page/segment. Possible causes are:

- The sum of the section sizes in the group is larger than one page/segment, including the gaps caused by alignment of sections.
- Other already located sections occupy the needed space.

E 284: RENAMESYMBOLS control: too many symbols to be renamed (maximum =*number*)

The total number of symbols to be renamed is limited

E 285: SETNOSGDPP control: invalid DPP name '*name*'.

The DPP name is one of DPP0, DPP1, DPP2 or DPP3.

E 286: SETNOSGDPP control: invalid page number *number* for *name*.

The page number assigned top a DPP is lower than 0 or higher than the last page number. Remind that DPP3 only can be assigned to page 3.

E 287: cannot use both SETNOSGDPP and ADDRESSES LINEAR

It is not possible to use these controls in combination. Use either one of them.

E 288: *control* control: invalid internal RAM size

The value for the IRAMSIZE control has to be larger or equal to zero or the address range for the MEMORY IRAM is too small.

E 289: invalid value for MEMSIZE control

The value for the MEMSIZE control has to be greater or equal to zero.

E 290: only one OVERLAY control allowed

This error is issued on each OVERLAY control which is not the first.

E 291: non CODE section '*name*' in overlay class '*name*'

An overlay can only be used for CODE memory banking. Only CODE sections are allowed in an overlay. The mentioned section belongs to a class used in the overlay. Check input source and the OVERLAY control in the invocation.

E 292: class '*name*' in the OVERLAY control has no CLASSES control

It is not possible to overlay classes if the base address of the class is not known. For this reason it is required to have a range, specified with the CLASSES control, for each class in the overlay control.

E 293: OVERLAY area too small for class '*name*'

The range specified with the CLASSES control for the mentioned class is larger than the range specified with the OVERLAY control.

E 294: module has more than one TASK

When the STRICTTASK control is set only one TASK per module is allowed. Do not set the STRICTTASK control or create only one TASK per module.

E 295: module scope {*name* ... : nesting too deep

The nesting of module scope operators is restricted to 8 levels. A new module scope operator starts with a '{'.

E 296: illegal module switch {*name*}

It is not allowed to switch the current module in the invocation nested in a temporary module scope switch.

Example:

```
{moda.obj ADDRESSES SECTIONS( {modb.obj} SECT1 (300h) )
}
```

The '{moda.obj' starts a temporary module scope switch. '{modb.obj}' starts a definitive module switch which will yield this error.

The following nesting is correct:

```
{moda.obj ADDRESSES SECTIONS( {modb.obj SECT1 (300h)} )
```

E 297: module scope: too many '}'

A new module scope operator starts with a '{' and ends with a '}'. When there are more close braces than open braces this error is issued.

E 298: module scope {*name* ... : missing '}'

When a temporary module scope switch is started within a control the matching close brace should also be placed within that control.

Example:

```
ADDRESSES SECTIONS( {mod1.obj sect1 (200h) )        ; error !
ADDRESSES SECTIONS( sect2 (300h) } )
```

The closing brace must be placed within the first control. The following is correct:

```
ADDRESSES SECTIONS( {mod1.obj sect1 (200h)} )
ADDRESSES SECTIONS( {mod1.obj sect2 (300h)} )
```

E 299: MEMORY control: ROM range *hexnum* to *hexnum* overlaps a previous RAM range

E 299: MEMORY control: RAM range *hexnum* to *hexnum* overlaps a previous ROM range

E 299: MEMORY control: IRAM range *hexnum* to *hexnum* overlapped by a ROM range

A range in the MEMORY ROM control overlaps a range in MEMORY RAM control or vice versa.

The first two errors are generated with following example:

```
MEMORY( ROM( 0-200h ) RAM( 100h-300h ) ROM( 2A0h-400h ))
```

The last error is generated with the following example:

```
MEMORY( ROM( 0fa00h - 0ffffh ) )
```

E 400: group '*name*' with SYSTEM section has absolute address outside system page

E 400: group '*name*' with SYSTEM section has absolute address outside system page

E 401: locating empty heap section

When dynamic memory allocation routines from the library are used, a heap section is created by default, but of size 0. This means that if these routines are used at run-time, there will never be heap space available and all allocations will fail. Because the existance of this section indicates at least one routine could make use of dynamic allocation, you should allocate sufficient heap space or remove all dynamic memory allocation.

E 402: system stack location is invalid

The XC16x/Super10 architectures allow relocating the system stack, but only in either the internal ram or the IO area (DMU-sram).

E 403: system stack too small to fit sections

When allocating the system stack, enough space must be reserved to fit all system stack sections. Allocate the system stack higher in memory or eliminate some system stack sections.

E 404: vector table scaling *number* is not supported

The linker / locator does not support this scaling factor. This can be caused by an assembler that does support a larger range or an invalid scaling factor was provided through a control.

E 405: inline vectors should be inside section C166_INT

The linker / locator demands that all inline vectors are gathered in section C166_INT. A vector was found that was declared inline, but not inside section C166_INT.

E 406: symbol type invalid for DPP assignment

When using symbol names to assign DPP values, the symbol type must be a valid address or constant type.

E 407: class '*class*' not found

A class was specified using a predefined variable like ?CLASS_*name*_TOP or ?CLASS_*name*_BOTTOM. This class was not found by the locator so the variable cannot be resolved.

E 408: symbol '*symbol*': external multiply defined with type mismatch

The external symbol *symbol* is defined with different types. Make sure that the types are equal.

E 409: symbol '*symbol*': external/public type mismatch

A symbol was resolved with a mismatch between the type of the public definition and the external declaration in another module. Make sure that both types are equal.

E 410: symbol '*symbol*': external/global type mismatch

A symbol was resolved with a mismatch between the type of the global definition and the external declaration in another module. Make sure that both types are equal.

The messages E 411 - E 421 concern not fitting relocations. The calculated value does not fit in the number of bits as indicated. Adjust the expression responsible for the relocation.

Example: using in the assembly a line like

```
MOV  R0, #lab + 20000h
```

Causes E 412 because lab + 20000h does not fit in 16 bit (1 word)

E 411: section '*name*', location *hexaddress*: value *number* does not fit in one byte

E 412: section '*name*', location *hexaddress*: value *number* does not fit in one word

E 413: section '*name*', location *hexaddress*: bad segment number *hexnumber*

E 414: section '*name*', location *hexaddress*: bad page number *hexnumber*

E 415: section '*name*', location *hexaddress*: bit offset *hexnumber* does not fit

E 416: section '*name*', location *hexaddress*: bad trap number *hexnumber*

E 417: section '*name*', location *hexaddress*: value *hexnumber* does not fit in 3 bit

E 418: section '*name*', location *hexaddress*: value *hexnumber* does not fit in 4 bit

E 419: section '*name*', location *hexaddress*: bit address *hexnumber* does not fit

E 420: section '*name*', location *hexaddress*: bad page number *hexnumber* in expression

E 421: section '*name*', location *hexaddress*: bad segment number *hexnumber* in expression

E 422: fill patterns are only allowed in ROM ranges

A FILLGAPS or FILLALL keyword was specified for a non-ROM memory range. This is not allowed. Initialize RAM ranges using run-time code.

E 423: fill pattern of size *size* cannot be aligned

The locator will align the fill pattern properly if it has size 1, 2, or 4 bytes (2, 4 or 8 characters, resp). Other pattern sizes are not accepted.

E 424: fill pattern must be a hexadecimal string

The fill pattern specified contains characters other than 0 - 9, a - f or A - F. The pattern is interpreted as a hexadecimal value string.

E 425: predefined symbol *name* could not be resolve

A predefined symbol was requested that could not be found in the symbol table. This can occur when ?INTVECT is used, but no vector table is generated, for example.

E 426: vector *number* is located outside the vector table

The specified vector would end up outside the vector table. This can be due to a changed vector table size (second argument of the VECTAB control) or due to vectors with a trap number larger than 127. Such trap numbers are supported on a specific subset of architectures and the actual vector table size should be specified with the VECTAB control.

E 427: specified vector table size is invalid

The vector table size should be specified in numbers of vectors and must lie between 1 and 256.

4 FATAL ERRORS (F)

F 300: can't create '*name*'

Cannot create the file with the mentioned name.

F 301: can't open '*name*'

Cannot open the file with the mentioned name.

F 302: can't open '*name*' twice

Cannot open the file with the mentioned name for the second time.

F 303: read error

A read error occurred while reading named file.

F 304: write error

A write error occurred while writing to the output file.

F 305: out of memory while allocating memory for *name*

An attempt to allocate memory failed.

F 307: offset not in string area

The offset to a string, found in the module was outside the modules string area.

F 308: file is not in archive format

The named file is not in the proper archive format.

F 309: invocation files nest too deep

The nesting of invocation files was too deep.

F 310: keyword '*name*' only valid while locating

The keyword read from the invocation can only be used while locating

F 311: keyword '*name*' only valid while linking

The keyword read from the invocation can only be used while linking.

F 314: too many address ranges

The number of address ranges in a CLASSES control could not be stored. Reduce the number of ranges.

F 315: not an object file

The linker/locator did not found the magic number for an object file

F 316: not an archive file

The linker/locator did not found the magic number for an archive file

F 317: not a 166 object file

An attempt was made to link or locate with a file which is not an object file in the 166 interpretation of a.out

F 318: wrong object format version

The file contained a version number which was not correct. The file is produced by an assembler version not belonging to this linker/locator version.

F 319: invalid input module (record type = *name*)

The module contains information which is invalid. The assembler was possibly stopped on errors and created a bad object. Try to to reassemble the source file.

F 320: too many sections

The maximum number of sections is exceeded. Try to combine sections in the assembly source.

F 321: extension record error

The linker always expects one extension record. If not present, a wrong type field number is found or more than one extension record is found the object file is not valid. Possibly due to assembly errors.

F 322: symbol '*name*': bad group name record

The name record with the name *name* was expected to be a group record. The object file has a bad format probably due to assembly errors. Translate your source file again.

F 323: symbol '*name*': bad class name record

The name record with the name *name* was expected to be a class record. The object file has a bad format probably due to assembly errors. Translate your source file again.

F 324: too many classes

The total number of classes exceeded the maximum.

F 325: too many groups

The total number of groups exceeded the maximum.

F 326: can't reopen '*name*'

Cannot reopen the file with the mentioned name.

F 327: unexpected end of file

Due to an error in the format of the object file the end of file was reached where data was expected. This is possibly due to assembly errors

F 328: input and output file name are equal

Choose another output file name

F 329: input and print file name are equal

Choose another print file name

F 330: output and print file name are equal

Choose another print or another output file name

F 331: library expected

The file was expected to be a library.

F 332: too many register banks

The number of combined register banks exceeded the limit. Reduce the number of register banks.

F 333: protection error: *message*

The C166/ST10 linker/locator is a protected program. Check for correct installation.

F 334: evaluation date expired !!

Only used in evaluation versions of l166

F 335: too many symbols

The number of symbols is limited by the object format to 65535. This maximum is exceeded while reading the input object files. The total number of symbols in the output file is too much. This problem can be solved by reducing the number of symbols from the input file. Try to compile without -g or assemble with the NODEBUG control. If this error comes from the locator it is also possible to link with the NODEBUG control or to locate some tasks with the PURGE control.

F 336: restriction in demo version: *message*

The demo version has restrictions to number of input modules, number of sections in output file, number of symbols in output file and number of initialized (ROM) bytes in the output file.

F 337: cannot use the GLOBALSONLY and OVERLAY controls together

When you use the GLOBALSONLY control to import symbols from an already located file you cannot use the OVERLAY control.

F 338: search path list too long

While appending a path to a search path list the total length became too long. Try to remove unused paths or shorten directory names.

F 339: output and MISRA C file name are equal

Choose another MISRA C or another output file name

F 340: print and MISRA C file name are equal

Choose another print or another MISRA C file name

F 341: input and MISRA C file name are equal

Choose another input or another MISRA C file name

F 342: relocation error: *message*

There was an error while relocation code. Probably one of the input modules is corrupt. Please recompile your code and check the output for errors.

If the problem persists, please contact your sales representative. Remember the situation and context in which the error occurred and make a copy of the source file.

5 INTERNAL ERRORS (I)

I 900: internal error l166(*file*,*line*): *message*

If this error occurs, please contact your sales representative. Remember the situation and context in which the error occurred and make a copy of the source file.

APPENDIX I

CONTROL PROGRAM ERROR MESSAGES

TASKING

APPENDIX

This appendix contains all warning (W), errors (E) and fatal errors (F) of the control program **cc166**.

F 1: out of memory

Close one or more applications and try again.

F 5: out of environment space

All memory reserved for environment settings is in use. Delete unused environment variables or reserve more memory space for environment settings.

F 7: cannot execute command: *command*

The control program called a tool which could not be executed. Check the environment settings and whether the tool is properly installed.

E 8: cannot open file for reading: *name*

The file *name* could not be opened for reading. Check whether the file exist and whether you have read permissions.

E 9: cannot open file for writing: *name*

The file *name* could not be opened for writing. Check whether the file exist and whether you have write permissions.

E 12: missing quote in command file: *name*

A string in the command file is missing a single or double quote.

E 13: command files nested too deep: *name*

Command files can be nested six levels deep.

E 14: invalid control: *name*

A control was specified which does not exist for the control program.

E 15: invalid argument: *option*

An option was specified which does not exist for the control program.

E 16: unhandled input file: *name*

The file *name* has an extension which is not recognized by the control program. The control program recognizes files with the following extensions: `.c`, `.cpp`, `.asm`, `.src`, `.lib`, `.ili`, `.ilo`, `.out` and `.obj`.

E 17: missing input file *name*

At least one source file must be specified.

E 19: cannot create instantiation directory: *path*

The C++ compiler tried to create a directory for placing `.ic` files. Check the path name and whether you have write permissions.

E 20: cannot determine current directory: *path*

Check wether the directory exists.

E 21: missing argument for option: *option*

This option must be used with one or more arguments.

E 22: unrecognized command line option: *option*

The option *option* is not recognized by the control program.

E 24: error while closing file

The file *name* could not be closed. Close all applications and try again.

E 25: read error in command file: *name*

The command file *name* could not be closed. Close all applications and try again.

E 26: out of memory

Close one or more applications and try again.

W 29: option -o ignored for multiple source files

You can specify only one source in combination with the option **-o**

APPENDIX J

MAKE UTILITY ERROR MESSAGES

TASKING

6 APPENDIX

1 INTRODUCTION

This appendix contains all warnings and errors of the make utility **mk166**.

2 WARNINGS

circular dependency detected for target: *name* (warning)

3 ERRORS

<< requires a tag name

The tag name must be used to mark the begin and end of lines that must be placed in a temporary file.

Badly formed macro

Macros must have the form '`WORD = more stuff`' or '`WORD += more stuff`'.

Can't access temporary directory.

Check if the directory exists and that you have write permissions.

can not open error file

The eror file could not be opened for writing. Check whether the file exists. Check if there is enough disk space.

cannot open *filename*

The file *filename* could not be opened. Check whether the file exists.

cannot open standard input.

You can use option '**–f –**' on the command line to read information from standard input.

Cannot open temporary files

Check if there is enough disk space and that you have write permissions. Temporary files have the syntax `mk*.tmp`.

cannot change dir: *name*

chdir: current working directory name too long

Directory names should be no longer than 100 bytes for make to work..

Don't know how to make *target*

This message occurs when the current package does not contain the mentioned file as a member; the file is part of another package or even workspace. This error occurs when you open a file (in EDE) in another package or workspace, and decide to compile/assemble it after having changed something in the source file. Close the window (and make sure you build the proper package or workspace afterwards) and build the current package.

else: too much else

With an `ifdef`/`endif` or `ifndef`/`endif` pair you can use only one `else` contruction.

endif: too much endif

Every `ifdef` or `ifndef` must have exactly one corresponding `endif`.

exist: first argument (file name) is missing

exist: second argument is missing

The `exist` function has the following syntax: `$(exist` *`file command`*`)`.

export: missing or invalid macro name

The `export` keyword must be followed by a valid macro name.

file: argument (file name) is missing

The `file` function has the following syntax: `$(file` *`file`*`)`.

ifdef/ifndef: nesting too deep

The `ifdef` or `ifndef` preprocessing keywords should not be nested more than 16 levels deep.

ifdef: missing or invalid macro name

An `ifdef` must be followed by a valid macro name.

Improper macro.

A macro must be in the form `$(MACRO)` or `${MACRO}`.

include: requires a pathname

The `include` keyword must be followed by a valid include filename.

Loop detected while expanding *name*

Macro too long: *name*

Macro/function name too long: *name*

A macro/function name must not be longer than 1280 characters.

Macro/function nesting too deep: *name*

match: first argument (suffix) is missing

The `match` function has the following syntax: `$(match .`*`suffix files`*`)`.

missing endif

Every `ifdef` or `ifndef` must have exactly one corresponding `endif`.

nexist: first argument (file name) is missing

nexist: second argument is missing

The `nexist` function has the following syntax: `$(nexist `*`file command`*`)`.

No makefile, don't know what to make.

The file 'makefile' or 'Makefile' must be present containing the make rules. Or you can specify you own makefile with the **–f** option.

out of environment space

All memory reserved for environment settings is in use. Delete unused environment variables or reserve more memory space for environment settings.

out of memory

Close one or more applications and try again.

path: argument (file name) is missing

The `path` function has the following syntax: `$(path `*`file`*`)`.

rules must be after target

The rules to build a target must be specified after a ';' on the target line or on the next line (preceeded with white space).

separate: first argument (separator) is missing

The `separate` function has the following syntax: `$(separate` *`separation files`*`)`.

separate: first argument too long

The separation string must not be longer than 82 characters.

syntax error, incomplete macro.

too many options

Too many rules defined for target "*name*"

This message typically occurs if you have the .PJT file included in the list of files which build up your package. This is a common mistake when scanning files into your package; please remove the .PJT file of the current package from its file members.

Unexpected end of line seen

Each target line must have a colon.

Unknown function: *function_name*

Check the spelling of the function name. Allowed functions are `match`, `separate`, `protect`, `exist`, `nexist`, `path` and `file`.

APPENDIX K

LIMITS

TASKING

APPENDIX

1 ASSEMBLER

The assembler **a166** has the following limits:

- Number of errors that can be processed 100
- Level of invocation file nesting 8
- Number of sections that can be defined in one module 65533
- Number of classes that can be defined in one module 50
- Number of groups that can be defined in one module 50
- Level of section nesting 10

2 LINKER/LOCATOR

The Linker/locator **l166** has the following limits:

- Total number of sections 65533
- Total number of classes 250
- Total number of groups 250
- Level of invocation file nesting 8
- Number of register banks 250
- Number of common register ranges 20
- Number of EXCEPT symbols in the PUBLICS/NOPUBLICS control 40
- Number of RENAMESYMBOLS controls 100

APPENDIX L

INTEL HEX RECORDS

APPENDIX

Intel Hex records describe the hexadecimal object file format for 8-bit, 16-bit and 32-bit microprocessors. The hexadecimal object file is an ASCII representation of an absolute binary object file. There are six different types of records:

- Data Record (8-, 16, or 32-bit formats)
- End of File Record (8-, 16, or 32-bit formats)
- Extended Segment Address Record (16, or 32-bit formats)
- Start Segment Address Record (16, or 32-bit formats)
- Extended Linear Address Record (32-bit format only)
- Start Linear Address Record (32-bit format only)

The **ihex166** program generates records in the 8-bit format by default. When a section jumps over a 64k limit the program switches to 32-bit records automatically. 16-bit records can be forced with the **–i16** option.

General Record Format

In the output file, the record format is:

:	*length*	*offset*	*type*	*content*	*checksum*

Where:

: is the record header.

length is the record length which specifies the number of bytes of the *content* field. This value occupies one byte (two hexadecimal digits). The locator outputs records of 255 bytes (32 hexadecimal digits) or less; that is, *length* is never greater than FFH.

offset is the starting load offset specifying an absolute address in memory where the data is to be located when loaded by a tool. This field is two bytes long. This field is only used for Data Records. In other records this field is coded as four ASCII zero characters ('0000').

type is the record type. This value occupies one byte (two hexadecimal digits). The record types are:

Byte Type	Record type
00	Data
01	End of File
02	Extended segment address (20–bit)
03	Start segment address (20–bit)
04	Extended linear address (32–bit)
05	Start linear address (32–bit)

content is the information contained in the record. This depends on the record type.

checksum is the record checksum. The locator computes the checksum by first adding the binary representation of the previous bytes (from *length* to *content*). The locator then computes the result of sum modulo 256 and subtracts the remainder from 256 (two's complement). Therefore, the sum of all bytes following the header is zero.

Extended Linear Address Record

The Extended Linear Address Record specifies the two most significant bytes (bits 16–31) of the absolute address of the first data byte in a subsequent Data Record:

:	02	0000	04	*upper_address*	*checksum*

The 32-bit absolute address of a byte in a Data Record is calculated as:

(*address* + *offset* + *index*) modulo 4G

where:

address is the base address, where the two most significant bytes are the *upper_address* and the two least significant bytes are zero.

offset is the 16-bit offset from the Data Record.

index is the index of the data byte within the Data Record (0 for the first byte).

Example:

```
:0200000400FFFB
 | |    | |    |_ checksum
 | |    | |_ upper_address
 | |    |_ type
 | |_ offset
 |_ length
```

Extended Segment Address Record

The Extended Segment Address Record specifies the two most significant bytes (bits 4–19) of the absolute address of the first data byte in a subsequent Data Record, where bits 0–3 are zero:

:	02	0000	02	*upper_address*	*checksum*

The 20-bit absolute address of a byte in a Data Record is calculated as:

address + ((*offset* + *index*) modulo 64K)

where:

address is the base address, where the 20 most significant bit are the *upper_address* and the 4 least significant bits are zero.

offset is the 16-bit offset from the Data Record.

index is the index of the data byte within the Data Record (0 for the first byte).

Example:

```
:0200000200FFFD
 | |    | |    |_ checksum
 | |    | |_ upper_address
 | |    |_ type
 | |_ offset
 |_ length
```

Data Record

The Data Record specifies the actual program code and data.

:	*length*	*offset*	00	*data*	*checksum*

The *length* byte specifies the number of *data* bytes. The locator has an option that controls the length of the output buffer for generating Data records. The default buffer length is 32 bytes.

The *offset* is the 16-bit starting load offset. Together with the address specified in the Extended Address Record it specifies an absolute address in memory where the data is to be located when loaded by a tool.

Example:

```
:0F00200000232222754E00754F04AF4FAE4E22C3
 | |    | |                                |_ checksum
 | |    | |_ data
 | |    |_ type
 | |_ offset
 |_ length
```

Start Linear Address Record

The Start Linear Address Record contains the 32-bit program execution start address.

Layout:

:	04	0000	05	*address*	*checksum*

Example:

```
:0400000500FF0003F5
 | |    | |        |_ checksum
 | |    | |_ address
 | |    |_ type
 | |_ offset
 |_ length
```

Start Segment Address Record

The Start Segment Address Record contains the 20-bit program execution start address.

Layout:

:	04	0000	03	*address*	*checksum*

Example:

```
:0400000300FF0003F7
 | |    | |       |_ checksum
 | |    | |_ address
 | |    |_ type
 | |_ offset
 |_ length
```

End of File Record

The hexadecimal file always ends with the following end-of-file record:

```
:00000001FF
 | |    | |_ checksum
 | |    |_ type
 | |_ offset
 |_ length
```

INTEL HEX

APPENDIX M

MOTOROLA S-RECORDS

TASKING

M APPENDIX

The **srec166** program generates three types of S-records by default: S0, S1 and S9. S1 records are used for 16-bit addresses. With the **-r2** option of **srec166** S2 records are used (for 24-bit addresses) and with **-r3** S3 records are used (for 32-bit addresses). They have the following layout:

S0 - record

'S' '0' *<length_byte>* <2 bytes 0> *<comment>* *<checksum_byte>*

An **srec166** generated S-record file starts with a S0 record with the following contents:

length_byte : 14H
comment : (c) TASKING, Inc.
checksum : 72H

```
          ( c )   T A S K I N G ,   I n c .
S014000028632920544153 4B494E472C20496E632E72
```

The S0 record is a comment record and does not contain relevant information for program execution.

The length_byte represents the number of bytes in the record, not including the record type and length byte.

The checksum is calculated by first adding the binary representation of the bytes following the record type (starting with the length_byte) to just before the checksum. Then the one's complement is calculated of this sum. The least significant byte of the result is the checksum. The sum of all bytes following the record type is 0FFH.

S1 - record

With the **-r1** option of **srec166**, which is the default for **srec166**, the actual program code and data is supplied with S1 records, with the following layout:

'S' '1' *<length_byte> <address> <code bytes> <checksum_byte>*

This record is used for 2-byte addresses.

Example:

```
S1130250F03EF04DF0ACE8A408A2A013EDFCDB00E6
  | |   |                                 |_ checksum
  | |   |_ code
  | |_ address
  |_ length
```

srec166 has an option that controls the length of the output buffer for generating S1 records.

The checksum calculation of S1 records is identical to S0.

S9 - record

With the **-r1** option of **srec166**, which is the default for **srec166**, at the end of an S-record file, **srec166** generates an S9 record, which contains the program start address. S9 is the corresponding termination record for S1 records.

Layout:

'S' '9' *<length_byte> <address> <checksum_byte>*

Example:

```
S9030210EA
  | |   |_checksum
  | |_ address
  |_ length
```

The checksum calculation of S9 records is identical to S0.

MOTOROLA S

S2 - record

With the **-r2** option of **srec166** the actual program code and data is supplied with S2 records, with the following layout:

'S' '2' *<length_byte> <address> <code bytes> <checksum_byte>*

This record is used for 3-byte addresses.

Example:

```
S213FF002000232222754E00754F04AF4FAE4E22BF
  | |      |                                |_ checksum
  | |      |_ code
  | |_ address
  |_ length
```

srec166 has an option that controls the length of the output buffer for generating S2 records. The default buffer length is 32 code bytes.

The checksum calculation of S2 records is identical to S0.

S8 - record

With the **-r2** option of **srec166** at the end of an S-record file, **srec166** generates an S8 record, which contains the program start address. S8 is the corresponding termination record for S2 records.

Layout:

'S' '8' *<length_byte> <address> <checksum_byte>*

Example:

```
S804FF0003F9
  | |      |_checksum
  | |_ address
  |_ length
```

The checksum calculation of S8 records is identical to S0.

S3 - record

With the **-r3** option of **srec166** the actual program code and data is supplied with S3 records, with the following layout:

'S' '3' *<length_byte> <address> <code bytes> <checksum_byte>*

This record is used for 4-byte addresses.

Example:

```
S3070000FFFE6E6825
  | |       |    |_ checksum
  | |       |_ code
  | |_ address
  |_ length
```

srec166 has an option that controls the length of the output buffer for generating S3 records.

The checksum calculation of S3 records is identical to S0.

S7 - record

With the **-r3** option of **srec166** at the end of an S-record file, **srec166** generates an S7 record, which contains the program start address. S7 is the corresponding termination record for S3 records.

Layout:

'S' '7' *<length_byte> <address> <checksum_byte>*

Example:

```
S70500006E6824
  | |       |_checksum
  | |_ address
  |_ length
```

The checksum calculation of S7 records is identical to S0.

MOTOROLA S

INDEX

INDEX

TASKING

INDEX

Symbols

.DEFAULT, 10-60
.DONE, 10-60
.erl, file extension, 3-5
.IGNORE, 10-60
.INIT, 10-60
.lst, file extension, 3-5
.mpe extension, 2-14
.obj, file extension, 3-4
.PRECIOUS, 10-60
.SILENT, 10-60
.src, file extension, 3-4
.SUFFIXES, 10-60
?file, 7-6
?line, 7-6
?symb, 7-6
" ", 2-56
#line, 7-7
$, 7-5
$ location counter, 5-12

Numbers

24-bit address, 4-4

A

a.out, file header, A-5
a166
controls
absolute/noabsolute, 6-9
asmlineinfo/noasmlineinfo, 6-10
case/nocase, 6-12
checkbus18/nocheckbus18, 6-13
checkc166sv1div/nocheckc166sv1div, 6-14
checkc166sv1divmdl/nocheckc166sv1divmdl, 6-15
checkc166sv1dpram/nocheckc166sv1dpram, 6-16
checkc166sv1extseq/nocheckc166sv1extseq, 6-18
checkc166sv1muldivmdlh/nocheckc166sv1muldivmdlh, 6-19
checkc166sv1phantomint/nocheckc166sv1phantomint, 6-20
checkc166sv1scxt/nocheckc166sv1scxt, 6-22
checkcpu16/nocheckcpu16, 6-24
checkcpu1r006/nocheckcpu1r006, 6-25
checkcpu21/nocheckcpu21, 6-26
checkcpu3/nocheckcpu3, 6-23
checkcpujmpracache/nocheckcpujmpracache, 6-28
checkcpuretiint/nocheckcpuretiint, 6-29
checkcpuretpext/nocheckcpuretpext, 6-30
checklondon1/nochecklondon1, 6-31
checklondon1751/nochecklondon1751, 6-32, 6-33
checklondonretp/nochecklondonretp, 6-35
checkmuldiv/nocheckmuldiv, 6-36
checkstbus1/nocheckstbus1, 6-37
date, 6-38
debug/nodebug, 6-39
eject, 6-40
errorprint/noerrorprint, 6-41, 6-42
extend, 6-44
extend1, 6-44
extend2, 6-44
extend22, 6-44
extmac, 6-44
extpec16/noextpec16, 6-46
float, 6-47
gen/genonly/nogen, 6-49
gso, 6-50

header/noheader, 6-51
include, 6-52
lines/nolines, 6-53
list/nolist, 6-54
listall/nolistall, 6-55
locals/nolocals, 6-56
misrac, 6-57
mod166/nomod166, 6-58
model, 6-59
object/noobject, 6-60
optimize/nooptimize, 6-61
overview of, 6-4–6-83
pagelength, 6-62
pagewidth, 6-63
paging/nopaging, 6-64
pec/nopec, 6-65
print/noprint, 6-67
retcheck/noretcheck, 6-68
save/restore, 6-70
segmented/nonsegmented, 6-71
stdnames, 6-72
stricttask/nostricttask, 6-74
symb/nosymb, 6-75
symbols/nosymbols, 6-76
tabs, 6-77
title, 6-78
type/notype, 6-79
warning, 6-80
warningaserror/nowarningaserror, 6-82
xref/noxref, 6-83
general controls, 6-3
primary controls, 6-3
A166INC, 3-5, 10-22
abbreviations, 5-6
abort function, 2-48
absolute, a166 control, 6-9
addition, 5-18
addresses, locate control, 9-38
addressing modes, 5-4
branch target, 5-4
immediate, 5-4
indirect, 5-4
long, 5-4
short, 5-4
algorithm, evaluation of macro calls, 2-72
align type, 7-59
bit, 7-59
bitaddressable, 7-60
byte, 7-59
dword, 7-59
iramaddressable, 7-60
page, 7-59
pecaddressable, 7-60
segment, 7-60
word, 7-59
allocation specification records, A-11
ar166, 10-4
archiver, 10-4
arithmetic operators, 5-18
asmlineinfo, a166 control, 6-10
assembler
error print file, C-13
group map, C-9
input files and output files, 3-4
invocation, 3-3
limits, K-3
list file, C-3
list file header, C-3
page header, C-3
register area table, C-12
section map, C-7
source listing, C-4
symbol table, C-9
total error/warning page, C-13
xref table, C-12
assembler controls, overview of, 6-4–6-83
assembler directives
?file, 7-6
?line, 7-6
?symb, 7-6
#line, 7-7
assume, 7-8
bit, 7-13

INDEX

block, 7-14
cgroup/dgroup, 7-15
db, 7-17
dbfill/dwfill/ddwfill, 7-22
dbit, 7-17
ddw, 7-17
defr/defa/defx/defb/defbf/defval, 7-24
ds, 7-17
dsb, 7-17
dsdw, 7-17
dsptr/dpptr/dbptr, 7-27
dsw, 7-17
dw, 7-17
end, 7-30
equ, 7-31
even, 7-32
extern/extrn, 7-33
global, 7-36
label, 7-38
lit, 7-40
name, 7-41
org, 7-42
pecdef, 7-44
proc/endp, 7-45
public, 7-49
regdef/regbank/comreg, 7-51
section/ends, 7-58
set, 7-63
sskdef, 7-64
typedec, 7-65
assembly source file, 3-4
assign, l166 control, 9-41
assume, assembler directive, 7-8
at, combine type, 7-62
atomic, 4-7
attribute overriding operators, 5-24
attribute value operators, 5-28

B

base relocatability, 5-11
binary operator, 5-17
bit, assembler directive, 7-13
bit addressable sfr, 5-33
bit alignment, 7-59
bit names, 5-33
bit pointer, 7-27
bit pointers, 1-45
bit section, 7-59
bitaddressable, 7-60
bitwise and operator, 5-21
bitwise not operator, 5-21
bitwise operators, 5-21
bitwise or operator, 5-21
bitwise xor operator, 5-21
block, assembler directive, 7-14
bof operator, 5-31
break function, 2-46
built-in functions, 2-28
  overview of m166, 2-58
byte alignment, 7-59
byte forwarding, 10-19, 10-22

C

C-escape sequence, 5-16
C166 memory model, 1-28
case
  a166 control, 6-12
  l166 control, 9-43
  m166 control, 2-8
cc166, 10-8
CC166BIN, 10-18
CC166OPT, 10-18
cgroup, assembler directive, 7-15
checkbus18, a166 control, 6-13
checkc166sv1div, a166 control, 6-14
checkc166sv1divmdl, a166 control, 6-15
checkc166sv1dpram, a166 control, 6-16

checkc166sv1extseq, a166 control, 6-18
checkc166sv1muldivmdlh, a166 control, 6-19
checkc166sv1phantomint, a166 control, 6-20
checkc166sv1scxt, a166 control, 6-22
checkclasses, locate control, 9-44
checkcpu16, a166 control, 6-24
checkcpu1r006, a166 control, 6-25
checkcpu21, a166 control, 6-26
checkcpu3, a166 control, 6-23
checkcpujmpracache, a166 control, 6-28
checkcpuretiint, a166 control, 6-29
checkcpuretpext, a166 control, 6-30
checkfit, locate control, 9-45
checkglobals, link control, 9-46
checklondon1, a166 control, 6-31
checklondon1751, a166 control, 6-32, 6-33
checklondonretp, a166 control, 6-35
checkmismatch, l166 control, 9-47
checkmuldiv, a166 control, 6-36
checkstbus1, a166 control, 6-37
checkundefined, m166 control, 2-9
class, 1-26, 7-62
classes, 1-6
  locate control, 9-48
code section, 7-58
codeinrom, l166 control, 9-50
combine type, 7-60
  at, 7-62
  common, 7-61
  glbusrstack, 7-62
  global, 7-61
  private, 7-60
  public, 7-60
  sysstack, 7-61
  usrstack, 7-61
command file, 10-11
command line options
  assembler, 3-3
  l166, 9-10
  m166, 2-4
comment function, 2-56
comments, l166 control, 9-51
common
  combine type, 7-61
  registers, 1-19
  sections, 1-18
common sections, combination of, 9-9
comreg, assembler directive, 7-51
conditional assembly, 2-41
console I/O, built-in functions, 2-55
constants, 1-44
control flow, 2-41
control list, 2-4, 3-4
control program, 10-8
control program options
  -?, 10-10
  -c, 10-11
  -c++, 10-10
  -cc, 10-11
  -cf, 10-11
  -cl, 10-11
  -cm, 10-11
  -cp, 10-11
  -cprep, 10-11
  -cs, 10-11
  -f, 10-11
  -gs, 10-13
  -ieee, 10-13
  -ihex, 10-13
  -lib directory, 10-13
  -libcan, 10-13
  -libfmtiol, 10-13
  -libfmtiom, 10-14
  -libmac, 10-14
  -noc++, 10-14
  -nolib, 10-14
  -nostl, 10-16
  -notrap, 10-16
  -o, 10-16
  -srec, 10-13
  -tmp, 10-16

INDEX

-trap, 10-16
-V, 10-10
-v, 10-16
-v0, 10-16
-Wa, 10-10
-Wc, 10-10
-wc++, 10-17
-Wcp, 10-10
-Wf, 10-10
-Wl, 10-10
-Wm, 10-10
-Wo, 10-10
-Wpl, 10-10
CPU memory mode, 1-27
creating and calling macros, 2-28
creating macros with parameters, 2-34
cross-reference table, 6-83

D

d166, 10-19
data
defining, 7-17
initializing, 7-17
data section, 7-58
data units, 1-39
datan operator, 5-26
date
a166 control, 6-38
l166 control, 9-52
m166 control, 2-10
db, 7-17
dbfill, 7-22
dbit, 7-18
dbptr, 7-27
ddw, 7-18
ddwfill, 7-22
debug
a166 control, 6-39
l166 control, 9-53
debugging, 7-5
defa, 7-24
defb, 7-24
defbf, 7-24
define
built-in function, 2-28
m166 control, 2-11
defined function, 2-54
defining and initializing data, 7-17
defining labels, 7-38
code, 1-41
data, 1-43
definition and use of macro names/types, 2-61
defr, 7-24
defval, 7-24
defx, 7-24
dgroup, assembler directive, 7-15
directive, 4-3
directives, overview, 7-3
directory, default, 9-18
disassembler, 10-19
byte forwarding, 10-22
comments, 10-22
data and bit sections, 10-21
gaps, 10-21
register definition files, 10-22
division, 5-19
dmp166, 10-25
dot operator, 5-22
dpp, 5-24
dpptr, 7-27
ds, 7-18
dsb, 7-18
dsdw, 7-19
dsptr, 7-27
dsw, 7-19
dw, 7-18
dwfill, 7-22

dword alignment, 7-59

E

eject
a166 control, 6-40
m166 control, 2-13
else, 2-42, 10-54
embedded sections, 4-5
end, assembler directive, 7-30
endi, 2-42
endif, 10-54
endr, 2-45
endw, 2-44
environment variable
A166INC, 3-5, 10-22
CC166BIN, 10-18
CC166OPT, 10-18
HOME, 10-53
LINK166, 9-15
LOCATE166, 9-15
M166INC, 2-5
TMPDIR, 2-5, 3-5, 9-15, 10-18
used by control program, 10-18
user defined, 9-16
eqs function, 2-53
equ, 7-31
equal operator, 5-20
error list file, 3-5
error messages, archiver, I-1, J-1
errorprint
a166 control, 6-41, 6-42
m166 control, 2-14
errors, E-3
escape sequence, 5-16
eval function, 2-40
even, 7-32
exit function, 2-46
expression records, A-7
expression string, 5-16
expressions, 5-11
absolute, 5-11
assembler, 5-13
l166, 9-26
operand types, 5-13
relocatable, 5-11
extend, a166 control, 6-44
extend block, 4-7, 4-10
nesting, 4-11
extend controls, 8-5, 8-6
extend sfr instructions, 4-12
extend2
a166 control, 6-44
l166 control, 9-54
extend2_segment191, l166 control, 9-54
extend22, a166 control, 6-44
extended instruction set, 4-10
extension enabling, 8-5
extension header, A-10
extension records, A-9
extern-global connection, 1-16
extern/extrn, assembler directive, 7-33
externs, renamesymbols control, 9-105
extmac, a166 control, 6-44
extp, 4-7
extpec16, a166 control, 6-46
extpr, 4-7
extr, 4-7
exts, 4-7
extsr, 4-7

F

far procedure, 7-46
file extension, 3-4
file header, A-4
fixstbus1, locate control, 9-56
flat interrupt concept, 1-20
float, a166 control, 6-47

G

gen, 6-49
m166 control, 2-15
general, 9-25
locate control, 9-58
general controls, 9-24
genonly, 6-49
m166 control, 2-15
ges function, 2-53
glbusrstack, combine type, 7-62
global
assembler directive, 7-36
combine type, 7-61
groups, 9-9
global storage optimizer, 10-27
globals
locate control, 9-59
renamesymbols control, 9-105
globalsonly, locate control, 9-60
greater than operator, 5-20
greater than or equal operator, 5-20
group, 1-25
group directives, 7-15
groups, 1-5
renamesymbols control, 9-105
gso, 6-50
gso166, 10-27
gts function, 2-53

H

hdat section, 7-59
header
a166 control, 6-51
l166 control, 9-61
heap, 9-22, 9-62
far, 9-22
near, 9-22
heapsize, link control, 9-62
high, 5-22
HOME, 10-53

I

identifier, 4-3
ieee166, 10-43
if function, 2-42
ifdef, 10-54
ifndef, 10-54
ihex166, 10-45
in function, 2-55
include, 6-52
m166 control, 2-16
includepath, m166 control, 2-17
inline vector, 7-48
input specification, 4-3
instruction, 4-3
instruction set
extended, 4-10
software (80166), 4-7
Intel hex, record type, L-3
internal RAM, 9-66
interrupt, locate control, 9-64
interrupt concepts, 1-10
interrupt routine, 7-48
interrupt table, D-8
interrupt vector table, 1-14
intnrs, renamesymbols control, 9-105
inttbl, reserve, 9-108
invocation
assembler, 3-3
l166, 9-10
m166, 2-4
invocation file, 3-4
iram, memory, 9-74
iramaddressable, 7-60

iramsize, 8-6
locate control, 9-66

L

l166
environment variables, 9-15
expressions, 9-26
module scope switch, 9-25
naming convention, 9-5
naming conventions, 9-5
l166 controls, 9-24
addresses, 9-38
groups, 9-38
linear, 9-38
rbank, 9-38
sections, 9-38
assign, 9-41
case/nocse, 9-43
checkclasses/nocheckclasses, 9-44
checkfit/nocheckfit, 9-45
checkglobals, 9-46
checkmismatch/nocheckmismatch, 9-47
classes, 9-48
codeinrom/nocodeinrom, 9-50
comments/nocomments, 9-51
date, 9-52
debug/nodebug, 9-53
description of, 9-38
extend2/noextend2/extend2_segment 191, 9-54
fixstbus1, 9-56
general, 9-58
globals/noglobals, 9-59
globalsonly, 9-60
header/noheader, 9-61
heapsize, 9-62
interrupt, 9-64
iramsize, 9-66
libpath, 9-67
lines/nolines, 9-68
link/locate, 9-69
listregisters/nolistregisters, 9-70
listsymbols/nolistsymbols, 9-71
locals/nolocals, 9-72
map/nomap, 9-73
memory, 9-74
iram, 9-74
noiram, 9-74
ram, 9-74
rom, 9-74
memsize, 9-77
misrac, 9-78
modpath, 9-80
name, 9-82
objectcontrols, 9-83
order, 9-84
groups, 9-84
sections, 9-84
overlay, 9-88
overview, 9-32
overview per category, 9-28
pagelength, 9-91
pagewidth, 9-92
paging/nopaging, 9-93
print/noprint, 9-94
printcontrols, 9-96
publics/nopublics, 9-97
publicsonly, 9-99, 9-100
purge/nopurge, 9-104
renamesymbols, 9-105
externs, 9-105
globals, 9-105
groups, 9-105
intnrs, 9-105
publics, 9-105
reserve, 9-108
inttbl, 9-108
memory, 9-108
pecptr, 9-108
sysstack, 9-108
resolvedpp/noresolvedpp, 9-110

secsize, 9-112
set, 9-114
setnosgdpp, 9-115
smartlink, 9-117
stricttask/nostricttask, 9-121
summary/nosummary, 9-123
symb/nosymb, 9-124
symbolcolumns, 9-126
symbols/nosymbols, 9-125
task, 9-127
title, 9-128
to, 9-129
type/notype, 9-130
vecinit/novecinit, 9-131
vecscale, 9-132
vectab/novectab, 9-133
warning/nowarning, 9-135
warningaserror/nowarningaserror, 9-137
l166 input/output files
link stage, 9-19
locate stage, 9-19
l166 invocation, 9-10
label, 1-40, 4-3
labels, 7-38
code, 1-41, 7-38
data, 1-43, 7-38
defining with LABEL, 7-38
ldat section, 7-59
len function, 2-49
les function, 2-53
less than operator, 5-20
less than or equal operator, 5-20
libpath, link control, 9-67
library, 9-5
library maintainer, 10-4
limits
assembler, K-3
linker/locator, K-3
line, m166 control, 2-18
lines
a166 control, 6-53
l166 control, 9-68
link, l166 control, 9-69
link controls, 9-35
link functions, 9-4
link order, 9-14
link stage, 9-3
link/locate controls, 9-32
LINK166, 9-15
linker invocations, 9-10
linker/locator
error report, D-12
interrupt table, D-8
limits, K-3
memory map, D-5
page header, D-3
print file, D-3
print file header, D-3
purpose, 9-4
summary control, D-11
symbol table, D-7
list
a166 control, 6-54
m166 control, 2-19
list file, 3-5
listall, a166 control, 6-55
listregisters, l166 control, 9-70
listsymbols, l166 control, 9-71
lit, 7-40
literal mode, 2-64
local, 2-36
local symbols in macros, 2-36
locals
a166 control, 6-56
l166 control, 9-72
locate, l166 control, 9-69
locate algorithm, 9-6
locate controls, 9-35
locate functions, 9-4
locate stage, 9-3
LOCATE166, 9-15
location counter, 5-12, 7-5
locator invocations, 9-11
logical expressions, m166, 2-53
logical not operator, 5-21

low, 5-22
lts function, 2-53

M

m166
advanced concepts, 2-61
assembly file, B-3
built-in functions, 2-38
"", 2-56
@eval, 2-40
@set, 2-40
abort, 2-48
break, 2-46
define, 2-28
defined, 2-54
eqs, 2-53
exit, 2-46
ges, 2-53
gts, 2-53
if, 2-42
in, 2-55
len, 2-49
les, 2-53
lts, 2-53
match, 2-51, 2-63
nes, 2-53
out, 2-55
overview of, 2-58
repeat, 2-45
set, 2-63
substr, 2-50
while, 2-44
console I/O built-in functions, 2-55
control flow and conditional assembly, 2-41
controls, 2-6
case/nocase, 2-8
checkundefined/nocheckundefined, 2-9
date, 2-10
define, 2-11
eject, 2-13
errorprint/noerrorprint, 2-14
gen/genonly/nogen, 2-15
include, 2-16
includepath, 2-17
line/noline, 2-18
list/nolist, 2-19
pagelength, 2-20
pagewidth, 2-21
paging/nopaging, 2-22
print/noprint, 2-23
save/restore, 2-24
tabs, 2-25
title, 2-26
warning, 2-27
error print file, B-6
expressions, 2-39
general controls, 2-6
introduction, 2-3
invocation, 2-4
list file, B-4
page header, B-5
source listing, B-5
total error/warning page, B-6
literal vs. normal mode, 2-64
local, 2-36
logical expressions, 2-53
macro evaluation algorithm, 2-72
multi-token parameter, 2-67
operators, 2-39
overview controls, 2-6
parameter type string, 2-69
primary controls, 2-6
redefinition of macros, 2-64
scope of macro, 2-64
string comparison, 2-53
variable number of parameters, 2-68
M166INC, 2-5
macro processing language, 2-3
macros
creating and calling, 2-28

definition and use of, 2-61
evaluation algorithm, 2-72
local symbols in, 2-36
parameterless, 2-28
redefinition of, 2-64
scope of, 2-64
test on undefined, 2-43
user-defined, 2-28
with parameters, 2-34
makefile, 10-51
map, l166 control, 9-73
match function, 2-51, 2-63
memory
locate control, 9-74
reserve, 9-108
memory banking, 9-89
memory model, 1-27, 6-59
nonsegmented, 1-28
nonsegmented/small, 1-29
segmented, 1-32
memory model (C)
huge, 1-28
large, 1-28
medium, 1-28
small, 1-28
tiny, 1-28
memory segmentation, 1-23
memory units, 1-39
memsize, locate control, 9-77
minus operator, 5-19
misrac, 9-78
a166 control, 6-57
mk166, 10-51
.DEFAULT target, 10-60
.DONE target, 10-60
.IGNORE target, 10-60
.INIT target, 10-60
.PRECIOUS target, 10-60
.SILENT target, 10-60
.SUFFIXES target, 10-60
comment lines, 10-54
conditional processing, 10-54
exist function, 10-58
export line, 10-54
functions, 10-57
ifdef, 10-54
implicit rules, 10-62
include line, 10-54
macro definition, 10-53
macro MAKE, 10-56
macro MAKEFLAGS, 10-56
macro PRODDIR, 10-56
macro SHELLCMD, 10-56
macro TMP_CCOPT, 10-57
macro TMP_CCPROG, 10-56
macros, 10-55
makefiles, 10-53
match function, 10-57
nexist function, 10-59
protect function, 10-58
rules in makefile, 10-61
separate function, 10-58
special macros, 10-56
special targets, 10-60
targets, 10-59
mnemonics, 4-7
mod166, a166 control, 6-58
model
a166 control, 6-59
assembler control, 1-28
modpath, l166 control, 9-80
modular programming, 1-3
module, 9-5
module boundary, 1-7
module connections, 1-7
module name, 9-5
module scope controls, 9-24
module scope switch, 9-25
in addresses control, 9-39
in order control, 9-86
in renamesymbols control, 9-106
in secsize control, 9-113
with pubtoglb control, 9-101
module structure, 1-6
modulo, 5-19
multi-token parameter, 2-67

multiple definitions for a section, 4-4
multiplication, 5-19

N

name
assembler directive, 7-41
l166 control, 9-82
name records, A-7
near procedure, 7-46
nes function, 2-53
nested or embedded sections, 4-5
nesting extend blocks, 4-11
noabsolute, a166 control, 6-9
noasmlineinfo, a166 control, 6-10
nocase
a166 control, 6-12
l166 control, 9-43
m166 control, 2-8
nocheckbus18, a166 control, 6-13
nocheckc166sv1div, a166 control, 6-14
nocheckc166sv1divmdl, a166 control, 6-15
nocheckc166sv1dpram, a166 control, 6-16
nocheckc166sv1extseq, a166 control, 6-18
nocheckc166sv1muldivmdlh, a166 control, 6-19
nocheckc166sv1phantomint, a166 control, 6-20
nocheckc166sv1scxt, a166 control, 6-22
nocheckclasses, locate control, 9-44
nocheckcpu16, a166 control, 6-24
nocheckcpu1r006, a166 control, 6-25
nocheckcpu21, a166 control, 6-26
nocheckcpu3, a166 control, 6-23
nocheckcpujmpracache, a166 control, 6-28
nocheckcpuretiint, a166 control, 6-29
nocheckcpuretpext, a166 control, 6-30
nocheckfit, locate control, 9-45
nochecklondon1, a166 control, 6-31
nochecklondon1751, a166 control, 6-32, 6-33
nochecklondonretp, a166 control, 6-35
nocheckmismatch, l166 control, 9-47
nocheckmuldiv, a166 control, 6-36
nocheckstbus1, a166 control, 6-37
nocheckundefined, m166 control, 2-9
nocodeinrom, l166 control, 9-50
nocomments, l166 control, 9-51
nodebug
a166 control, 6-39
l166 control, 9-53
noerrorprint
a166 control, 6-41, 6-42
m166 control, 2-14
noextend2, l166 control, 9-54
noextpec16, a166 control, 6-46
nogen, 6-49
m166 control, 2-15
noglobals, locate control, 9-59
noheader
a166 control, 6-51
l166 control, 9-61
noiram, memory, 9-74
noline, m166 control, 2-18
nolines
a166 control, 6-53
l166 control, 9-68
nolist
a166 control, 6-54
m166 control, 2-19
nolistall, a166 control, 6-55
nolistregisters, l166 control, 9-70
nolistsymbols, l166 control, 9-71
nolocals
a166 control, 6-56
l166 control, 9-72
nomap, l166 control, 9-73
nomod166, a166 control, 6-58

non bit addressable sfr, 5-32
nonsegmented
  a166 control, 6-71
  assembler control, 1-27
noobject, a166 control, 6-60
nooptimize, a166 control, 6-61
nopaging
  a166 control, 6-64
  l166 control, 9-93
  m166 control, 2-22
nopec, a166 control, 6-65
noprint
  a166 control, 6-67
  l166 control, 9-94
  m166 control, 2-23
nopublics, l166 control, 9-97
nopurge, l166 control, 9-104
noresolvedpp, l166 control, 9-110
noretcheck, a166 control, 6-68
normal mode, 2-64
nostricttask
  a166 control, 6-74
  l166 control, 9-121
nosummary, l166 control, 9-123
nosymb
  a166 control, 6-75
  l166 control, 9-124
nosymbols
  a166 control, 6-76
  l166 control, 9-125
not equal operator, 5-20
notype
  a166 control, 6-79
  l166 control, 9-130
novecinit, locate control, 9-131
novectab, locate control, 9-133
nowarning, l166 control, 9-135
nowarningaserror
  a166 control, 6-82
  l166 control, 9-137
noxref, a166 control, 6-83
number, 5-15
  binary, 5-15
  decimal, 5-15
  hexadecimal, 5-15
  octal, 5-15

O

object, a166 control, 6-60
object file, 3-4
objectcontrols, l166 control, 9-83
offset relocatable, 5-11
operand combinations, 5-5
  abbreviations, 5-6
  inside extend blocks, 4-13
  outside extend blocks, 4-13
  real, 5-8
  virtual, 5-10
operands, 5-3
operators, 5-17
  precedence list, 5-17
  resulting operand types, 5-13, 5-14
optimize, a166 control, 6-61
options
  assembler, 3-3
  l166, 9-10
  m166, 2-4
order, l166 control, 9-84
org, 7-42
out function, 2-55
out.h, A-12
overlay, locate control, 9-88
overlay area, 9-90

P

pag operator, 5-29
page alignment, 7-59
page extend instructions, 4-14
page override operator, 5-24
page pointer, 7-27
page pointers, 1-45

pagelength
a166 control, 6-62
l166 control, 9-91
m166 control, 2-20
pagewidth
a166 control, 6-63
l166 control, 9-92
m166 control, 2-21
paging
a166 control, 6-64
l166 control, 9-93
m166 control, 2-22
parameterless macros, 2-28
parameters, 2-34
multi-token, 2-67
string, 2-69
variable number of, 2-68
parentheses, 5-12
pdat section, 7-59
pec, a166 control, 6-65
pec channels, 7-44
pecaddressable, 7-60
pecdef, assembler directive, 7-44
pecptr, reserve, 9-108
plus operator, 5-19
pof operator, 5-30
pointers, 1-44, 7-27
bit, 1-45
page, 1-45
segment, 1-44
predefined sections, 9-22
predefined symbols, 9-21
print
a166 control, 6-67
l166 control, 9-94
m166 control, 2-23
printcontrols, l166 control, 9-96
private, combine type, 7-60
proc task, 7-45
proc/endp, assembler directive, 7-45
procedure interfaces, 1-8
procedure types, 1-9
procedures, 1-5, 1-7
defining, 1-8
program, 9-5
program linkage directives, 7-5
program structure, 1-12
programming with C166/ST10 toolchain, 1-4
ptr operator, 5-25
public
assembler directive, 7-49
combine type, 7-60
groups, 9-9
publics
l166 control, 9-97
renamesymbols control, 9-105
publicsonly, link control, 9-99, 9-100
pubtoglb, 1-47
purge, l166 control, 9-104

R

RAM, internal, 9-66
ram, memory, 9-74
range specifier
rangep, 9-27
ranges, 9-28
rangep, range specifier, 9-27
ranges, range specifier, 9-28
real operand combinations, 5-8
redefinition of macros, 2-64
regbank, assembler directive, 7-51
regdef, assembler directive, 7-51
register
declaration, 1-15
definition, 1-15
register area table, C-12
register bank, 1-36
declaration, 1-37, 7-51
definition, 1-36, 7-51

register bank map
link stage, D-9
locate stage, D-10
register banks
combining by linker, 7-54
combining by locator, 7-54
registers, 1-34
relational operators, 5-20
relocation records, A-6
renamesymbols, l166 control, 9-105
repeat function, 2-45
reserve, locate control, 9-108
resolvedpp, l166 control, 9-110
restore
a166 control, 6-70
m166 control, 2-24
retcheck, a166 control, 6-68
rom, memory, 9-74

S

save
a166 control, 6-70
m166 control, 2-24
scope
global, 1-47
local, 1-46
public, 1-46
symbols, 1-46
scope of macros, 2-64
secsize, locate control, 9-112
section, 1-23, 9-5
attributes, 1-24
generating addresses in a, 1-24
section fillers, A-6
section headers, A-5
section type, 7-58
bit, 7-59
code, 7-58
data, 7-58
hdat, 7-59
ldat, 7-59
pdat, 7-59
section/ends, assembler directive, 7-58
sections, 1-5, 4-4
predefined, 9-22
sections and memory allocation, 3-5
seg operator, 5-28
segment alignment, 7-60
segment extend instructions, 4-14
segment pointer, 7-27
segment pointers, 1-44
segment range specification records, A-10
segmentation, 1-27
segmented
a166 control, 6-71
assembler control, 1-28
select high operator, 5-22
select low operator, 5-22
selection operators, 5-22
set, 7-63, 9-114
set function, 2-40, 2-63
setnosgdpp, locate control, 9-115
sfr, 7-25, 7-26
bit-addressable, 5-33
names, 5-32
non bit-addressable, 5-32
shift left operator, 5-20
shift operators, 5-20
shift right operator, 5-20
short operator, 5-27
sign operators, 5-19
smartlink
link control, 9-117
locate control, 9-117
sof operator, 5-29
source module, 1-6
special function registers, 5-32
srec166, 10-64
sskdef, assembler directive, 7-64
stdnames, 8-5
a166 control, 6-72

strictttask
a166 control, 6-74
l166 control, 9-121
string, 5-16
parameter type, 2-69
string comparison, m166, 2-53
string manipulation functions, 2-49
subprograms, 1-3
substr function, 2-50
subtraction, 5-18
summary, l166 control, 9-123
symb
a166 control, 6-75
l166 control, 9-124
symbol, 5-17
symbol table
assembler, C-9
linker/locator, D-7
symbolcolumns, l166 control, 9-126
symbols, 9-21
a166 control, 6-76
l166 control, 9-125
syntax of an expression, 5-12
sysstack
combine type, 7-61
reserve, 9-108
system names, 7-25
system stack size, 7-64

T

tabs
a166 control, 6-77
m166 control, 2-25
task, 9-5
attributes, 1-14
hardware support, 1-11
l166 control, 9-127
software definition, 1-13
software support, 1-12
structure, 1-13
task concept, 1-11
task connections, 1-15
extern-global, 1-16
task module, 1-15
tasks, 1-5
temporary files, 2-5, 3-5, 9-15, 10-18
title
a166 control, 6-78
l166 control, 9-128
m166 control, 2-26
TMPDIR, 2-5, 3-5, 9-15, 10-18
to, l166 control, 9-129
type
a166 control, 6-79
l166 control, 9-130
typedec, 7-65

U

unary operator, 5-17
unsigned greater than operator, 5-20
unsigned greater than or equal operator, 5-20
unsigned less than operator, 5-20
unsigned less than or equal operator, 5-20
usrstack, combine type, 7-61
utilities
ar166, 10-4
cc166, 10-8
d166, 10-19
dmp166, 10-25
gso166, 10-27
ieee166, 10-43
ibex166, 10-45
mk166, 10-51
srec166, 10-64

V

variable, 1-40

vecinit, locate control, 9-131
vecscale, locate control, 9-132
vectab, locate control, 9-133
vector table, 9-133
virtual operand combinations, 5-10
virtual return instruction, 4-9

W

warning
a166 control, 6-80
l166 control, 9-135
m166 control, 2-27
warningaserror
a166 control, 6-82
l166 control, 9-137
warnings, E-3
while function, 2-44
word alignment, 7-59

X

xref, a166 control, 6-83
xref table, C-12

INDEX